ANNUAL REPORT 2005

Meeting date: June 1, 2005

Designing a New Scrap-Based Continuous Steelmaking Process using CFD Simulation

Dr. Lifeng Zhang, Mr. Jun Aoki, Prof. Brian G. Thomas

Dept. of Mechanical & Industrial Engineering

University of Illinois at Urbana-Champaign

Mr. Jörg Peter, Prof. Kent D. Peaslee

Department of Material Science and Engineering

Fully Continuous Steelmaking Process

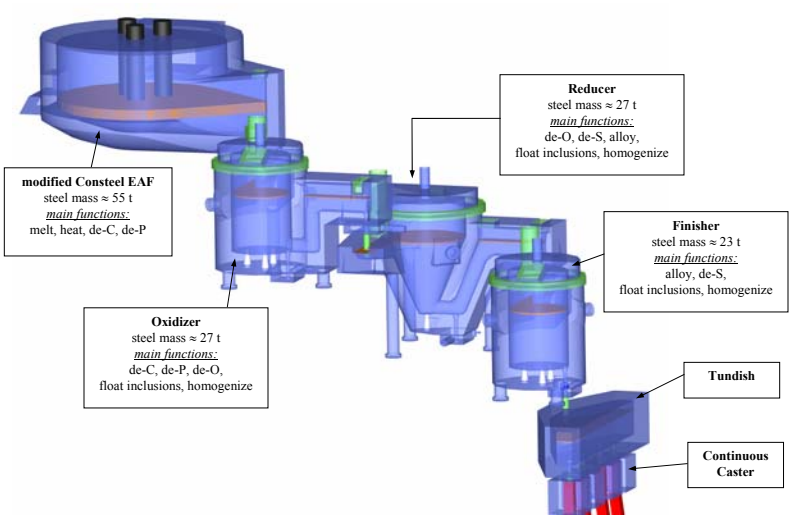

Oxidizer: de-C, de-P, de-O, Inclusion Removal, Homogenization

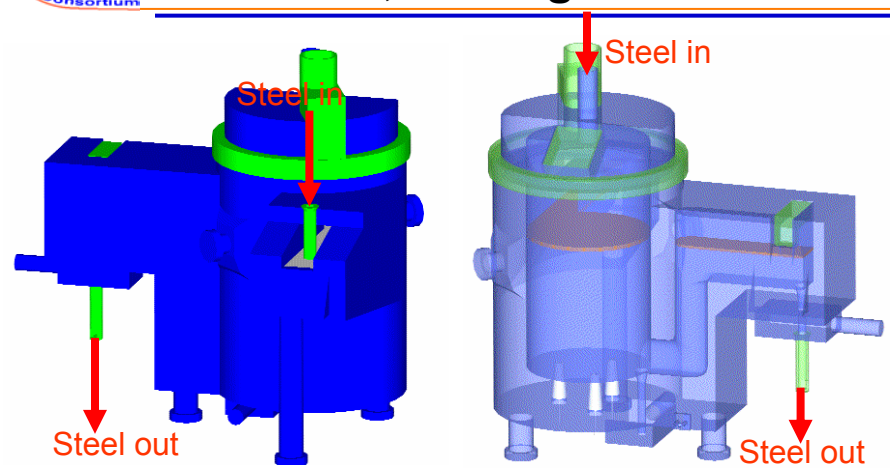

Left side view

Transparent right-side view

Designing the Oxidizer Vessel by Numerical Simulation: Models

- Fluid flow
  - Steel-gas two-phase flow (Eularian-Lagrangian)
  - Turbulence (k-ε two-equation model)
- Mixing phenomena
  - Turbulent solute transport
- Inclusion transport
  - Drag force, gravitational force, and virtual mass force
  - Random Walk model
- Simulation using FLUENT

Evaluation of Two Designs

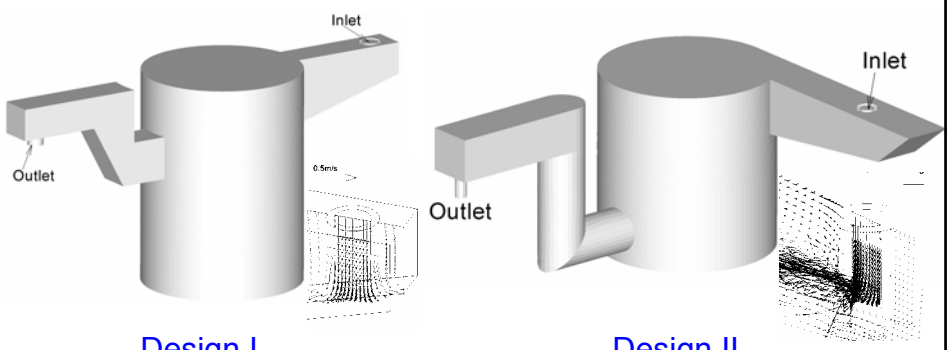

Design I

Design II

Differences: Inlet nozzle, position of inlet launder and outlet lauder, number of porous plug

Dimensions and Parameter of Two Oxidizer Vessel Designs

	Design I	Design II
Dimension of the vessel	ϕ1.4m, H2.0m	ϕ1.5m, H1.65m
Inside volume of the whole domain (m^3)	3.393	3.636
Inner diameter of inlet (mm)	140	120
Steel flow rate (tons/hour)	99.5	99.5
Theoretical residence time of the molten steel (s)	950	1018
Inlet velocity (m/s)	**0.232**	**0.3158**
Inlet turbulent energy (m^2/s^2)	3.1×10^{-4}	5.619×10^{-4}
Inlet turbulent energy dissipation rate (m^2/s^3)	4.0×10^{-4}	1.140×10^{-3}
Argon gas flow rate at 300K (m^3/min)	0.49	0.49
Bubble size at 1900K (mm)	**36.4**	**31.0**
Number of porous plug at the bottom	**2**	**3**
Total bubble injection at 1900K (#/s)	864	1406
Inclusion density (kg/m^3)	5000	5000

Fluid Flow Without Gas Injection

Fluid Flow in the Domain

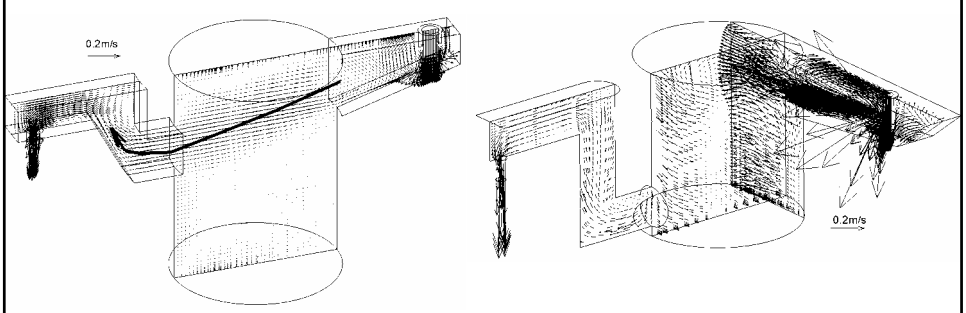

Design I: Strong short circuiting

Design II: Swirl flow by angling the inlet launder to avoid direct alignment with the outlet launder

Fluid Flow in the Domain

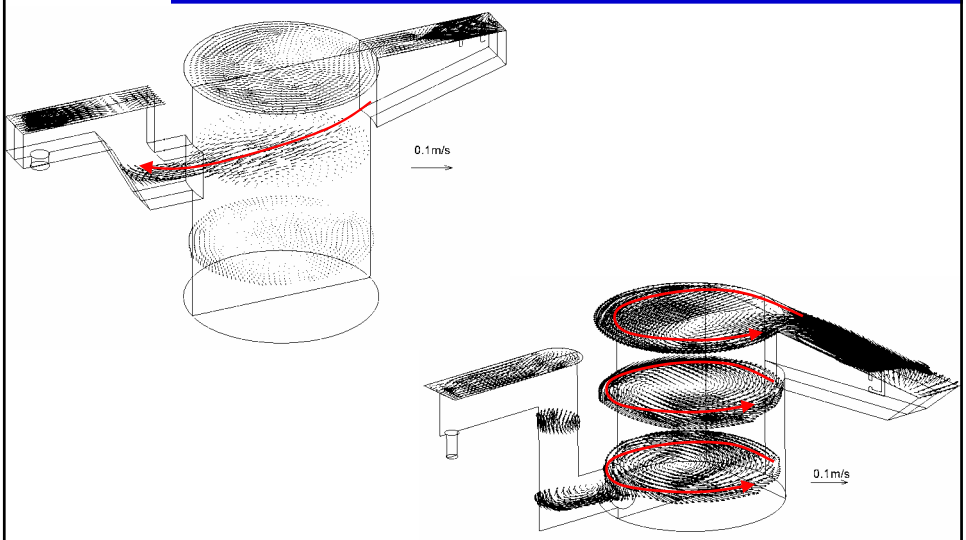

Fluid Flow on the Top Surface

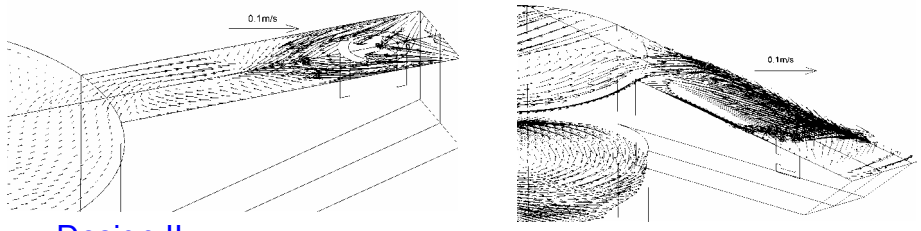

Design II:

- Strong backward flow toward the inlet launder along the top surface
- Likely push some slag along the surface towards the inlet nozzle

The surface velocity in the inlet launder:

Design I: ≤0.1m/s, Design II: ≤0.2m/s

Fluid Flow, Mixing and Inclusion Transport With Gas Injection

Iso-surface of 0.001 Volume Fraction of Argon Gas in the Vessel

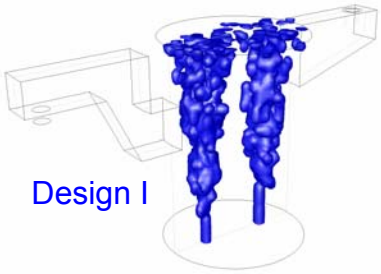

Design I

Argon gas flow rate: 0.49 Nm^3/min

Bubble size (at 1900K):

Design I: 36.4mm

Design II: 31.0

Design I seems to generate more dispersion of argon bubbles.

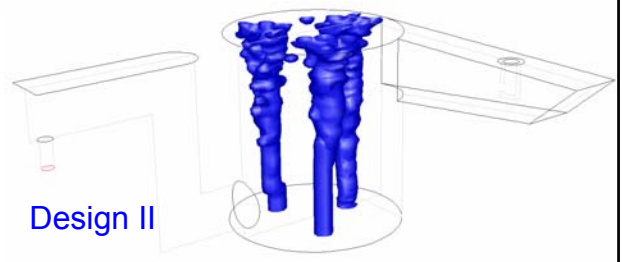

Design II

Fluid Flow Characteristic in the Vessel

	Design I	Design II
Average residence time of bubbles	1.24s	0.87s
Average rising speed of bubbles	1.61m/s	1.90m/s
Volume-averaged turbulent kinetic energy （m^2/s^2）	2.76×10^{-2}	1.31×10^{-2}
Volume-averaged turbulent energy dissipation rate (m^2/s^3)	5.46×10^{-2}	2.15×10^{-2}
Number of bubbles at pseudo-steady state	1075	1223
Volume-averaged velocity magnitude	**0.241 m/s**	**0.171 m/s**

Design II Has a Smaller Average Velocity than Design I

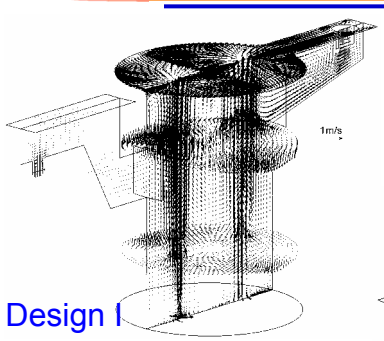

Design I

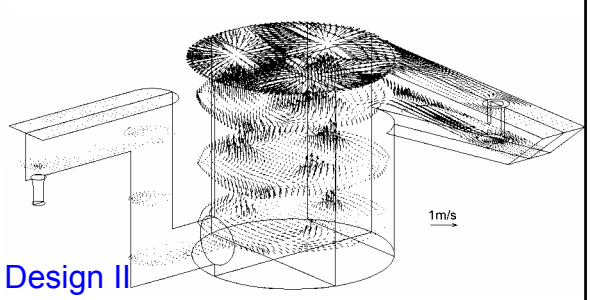

Design II

The volume-averaged velocity magnitude:
Design I: 0.241m/s; Design II: 0.171m/s

Fluid Flow in Design I

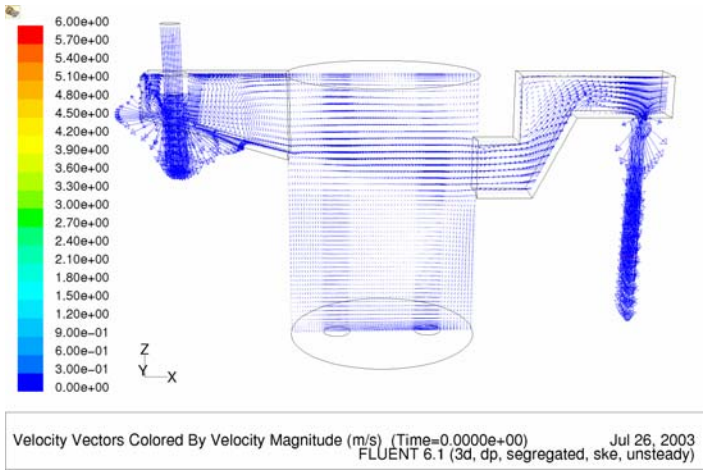

Velocities and Recirculation in the Vessel

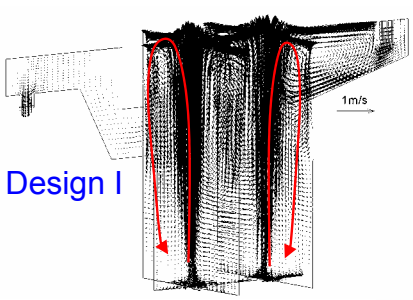

Design I

- Flow is upwards in the gas plume, and downwards along walls, generating a strong recirculation within the entire height of the vessel
- Stronger recirculation in Design I

- Particles (or solute fluids) recirculate a long time, good for chemical reactions.

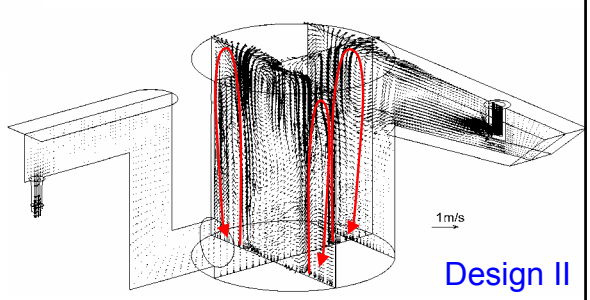

Design II

Top Surface Velocities

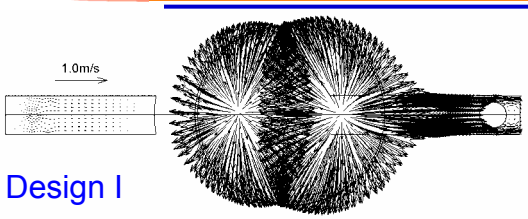

Design I

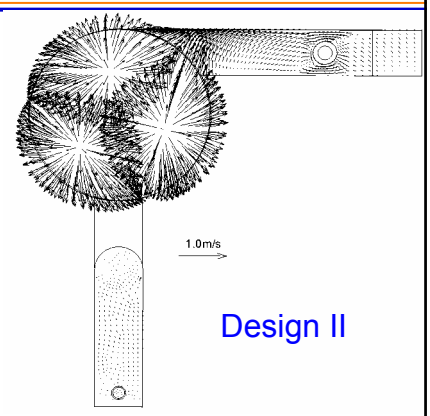

Design II

- Large velocities at the top
- Design I: Strong backflow into the inlet launder
- Design II: Asymetrical (swirl) backflow into the inlet launder, weaker than in Design I

Flow to Outlet Lauder

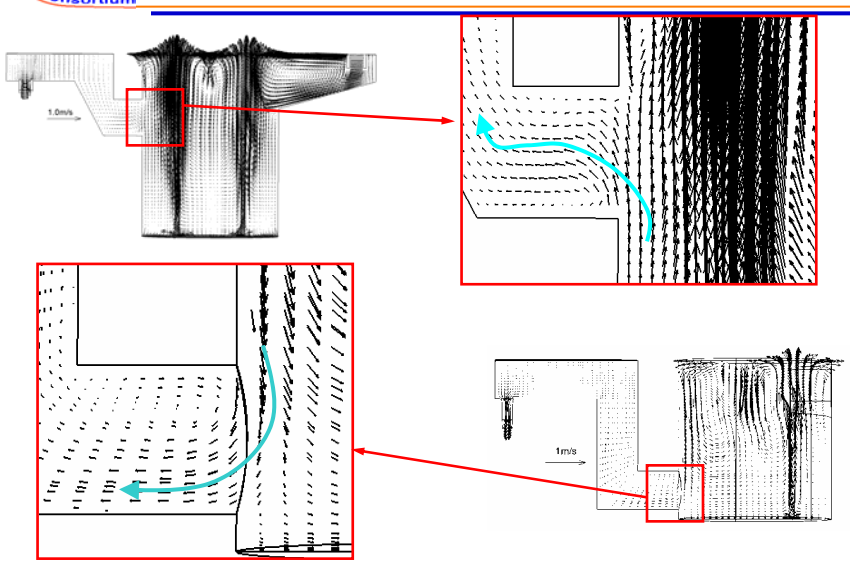

Flow to Outlet Lauder

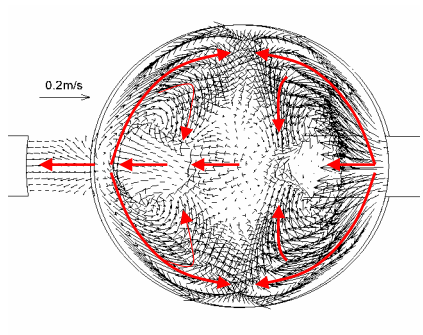

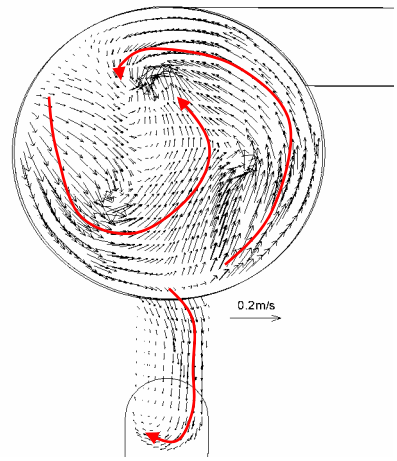

Design I:

- Two independent fully-recirculating flow induced by the two gas plumes.
- Short circuit flow

Design II: strong swirl

Turbulent Energy Dissipation: High top stirring power is good for interfacial reactions

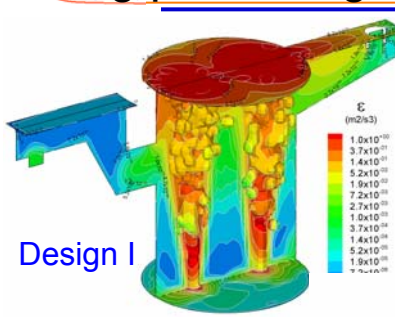

Design I

Energy dissipation at the top surface and the gas plume:
Design I: >1.0m^2/s^3 (1000 W/ton)
Design II: >0.37 m^2/s^3 (370W/ton)

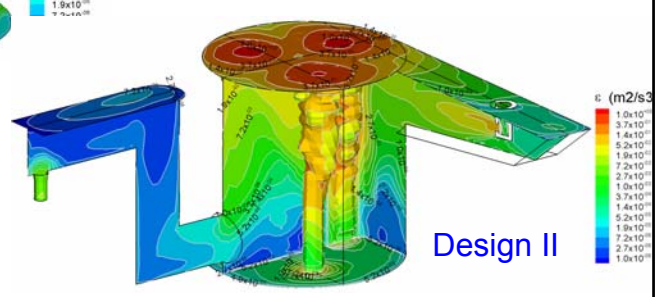

Design II

Solute Transport: Alloy Dispersion

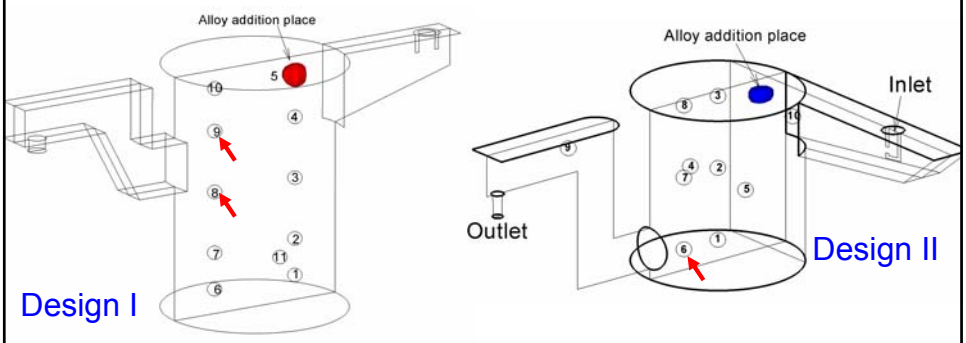

- Alloy addition place:
  center plane, midway between the center axis and inlet launder exit, 0.1m below the surface;
- Evaluating short circuiting by monitoring volume fraction at points 8 & 9 (Design I) and point 6 (Design II)

Short Circuiting

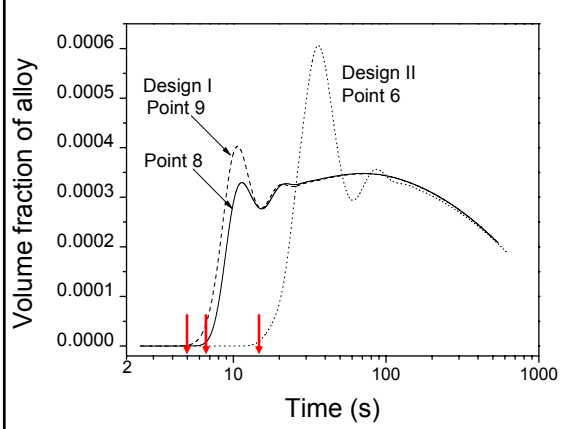

Minimum time to reach the outlet lauder:
Design I: 5-7s
Design II: 14s

Design II is better.

Alloy Volume Fraction at Monitoring Points with Time

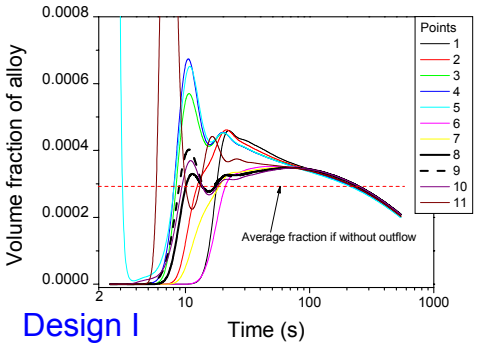

Design I

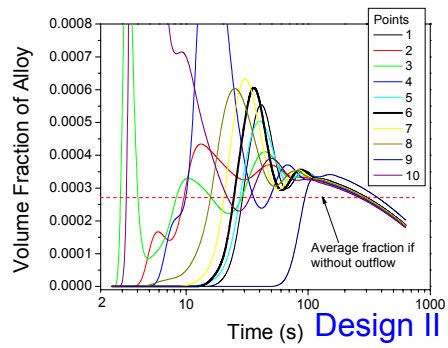

Design II

- Fluctuates with time until converging together
- Eventually dropping down with increasing time

Mixing Time and Steel Residence Time

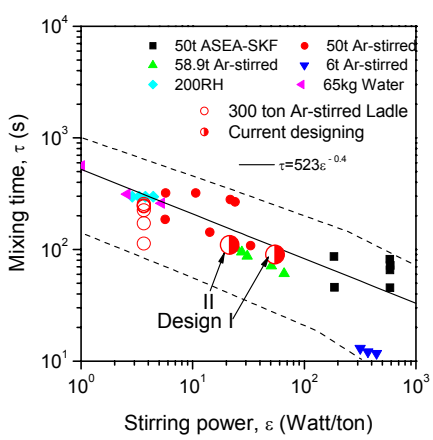

Mixing time: The time when all points reach the same value

- Mixing time:
  - Design I: 90s
  - Design II: 110s
- A little faster mixing in Design I
- Steel theoretical residence time (10 times > mixing time):
  - Design I: 950s
  - Design II: 1018s
- Mixing conditions are good in both designs

Mixing Time and Steel Residence Time

- A residence time exceeding the mixing time is sufficient for homogenization but not always enough for reactions.
- Reactions also depend on
  - interfacial area between the steel and gas
  - emulsification between steel and slag
  - thermodynamics
- Of greater importance is to
  - avoid short circuiting flow
  - transport the inclusions to the top slag

Alloy Iso-surface at 50.5s

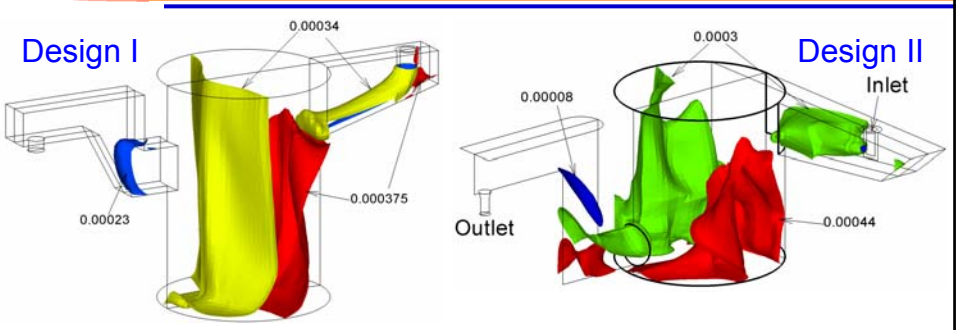

Design I: similar flow pattern to a pair of well-mixed vessels in series due to two strong gas injection plumes

Design II: three gas injection jet and the swirl fluid flow avoids this behavior

Effect of Alloy Addition Place on its Trajectory (Design I)

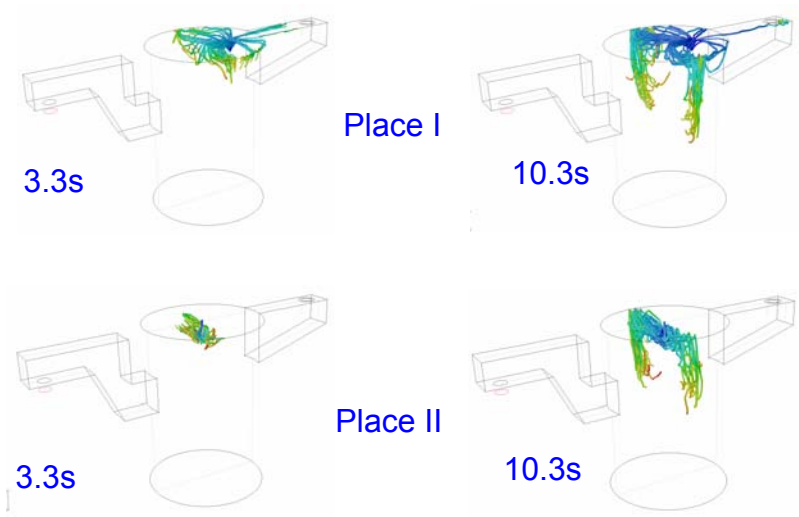

4 Inclusion Trajectories in Design I

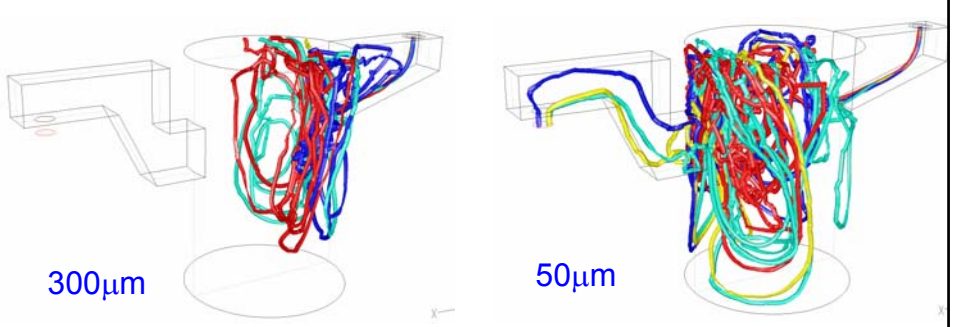

Too much recirculation of particles in steel:

- Good for chemical reactions
- Bad for inclusion removal

4 Inclusion Trajectories in Design II

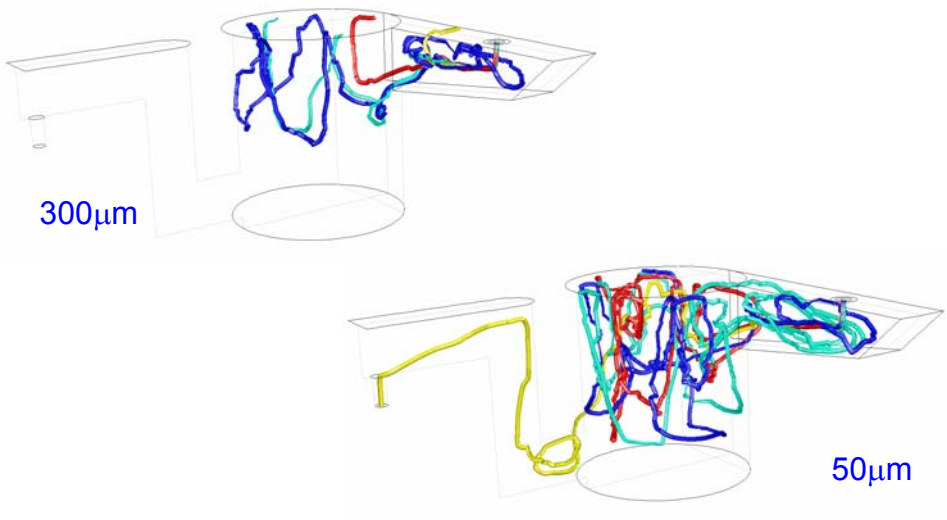

Mean Residence Time of 5000 Inclusions Each Size

Size	Design I	Design II
50μm	121.6	49.8
100μm	100.3	46.8
300μm	70.2	27.2

Inclusions removed more easily in Design II than Design I

Design II Has a Larger Inclusion Removal Fraction

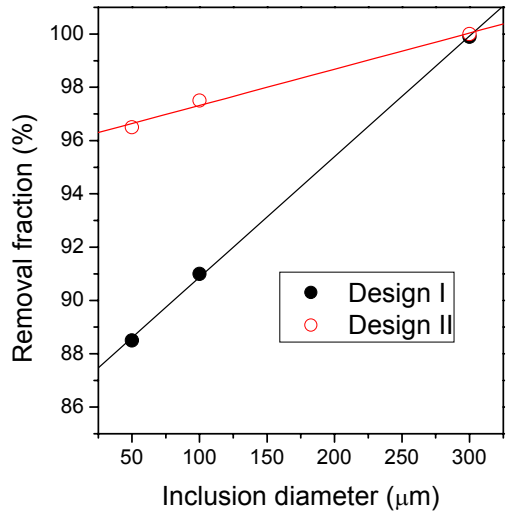

Fractions of Inclusions to Different Destinations

Top of inlet lauder | Top of cylindrical section | Top of outlet lauder

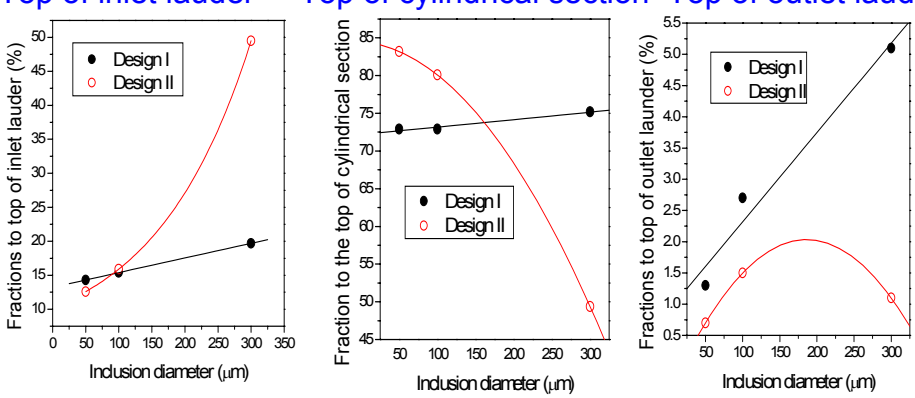

Design I: Most inclusions to the top of the cylindrical section

Design II: < 150μm inclusions mainly to the top of the cylindrical section, >150μm inclusions mainly to the top of the inlet laude

Residence Time and Mixing time (s)

	Theoretical residence time	Residence time of >50μm inclusions (5000kg/m^3)	Residence time of bubbles (1.6228 kg/m^3)	Mixing time
Design I	950	70.2-121.6	1.24	90s
Design II	1018	27.2-49.8	0.87	110s

- Smaller bubbles improve inclusion removal and mixing, favoring Design II over Design I for the current continuous steelmaking process.
- Bubble size: Design II: 31.0mm; Design I: 36.4mm

Summary

- Advanced CFD models of turbulent, multiphase flow are applied to design a new scrap-based process for continuous steelmaking, focusing on two different designs of the Oxidizer vessel.
- The design with a side opened inlet nozzle diminishes jet impingement on the bottom of the inlet launder.
- Merits of the design with inlet launder not in the same line as the outlet launder:
  - producing swirl
  - stabilizing the flow pattern
  - avoiding short circuiting
  - more inclusion removal
  - roughly the same mixing conditions as the no-swirl design

Future Investigations

- Consideration of multi-size bubbles, other inter-phase forces etc;
- Inclusion nucleation, growth, and collision with each other and with gas bubbles;
- Top surface waves, and interfacial phenomena (between gas and steel, and between steel and slag;
- Chemical reactions between top slag and the molten steel such as De-P and De-S and the reaction De-C, coupled with fluid flow;
- Heat transfer phenomena during this continuous steelmaking process;
- Design of other vessels

Acknowledgement

- U.S. Department of Energy (DE-FC36-03ID14279)
- Continuous Casting Consortium at UIUC
- National Science Foundation (Grant # 0115486).

Continuous Casting Consortium

Comments and Questions !!