ANNUAL REPORT 2005

Meeting date: June 1, 2005

Device to Measure Surface Velocity in Flowing Molten Steel

ME470 Spring 05 Design Group 8
Marshal Dvorak, Ryan Higgins, Ken Kurko, Ed Schultz
& **Brian G. Thomas**, Faculty Advisor

Department of Mechanical & Industrial Engineering
University of Illinois at Urbana-Champaign

Acknowledgements

- University of Illinois Design Project (support)
- Continuous Casting Consortium
- Professor J. Bentsman
- Professor B. Dunn
- Bob Coverdil
- Bret Rietow
- Derek King
- Adrian Lee
- Kent Elam
- Dave Foley
- Clint Graham and others at Mittal Riverdale

The Mold

Funnel Mold

Slag Powder

http://ccc.me.uiuc.edu

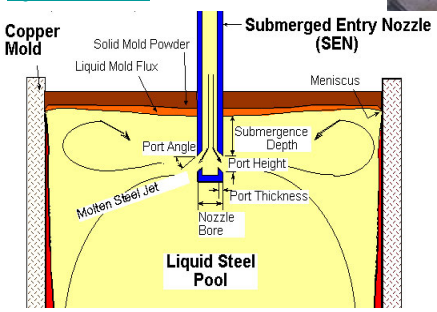

Why Measure Surface Velocity?

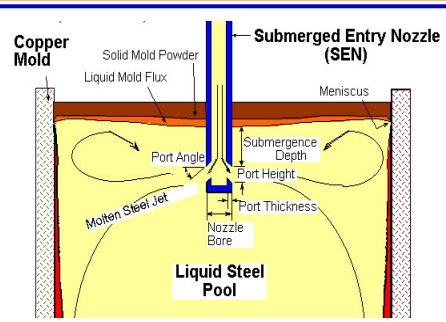

- Validate fluid flow models
  - Water models
  - Computer simulations
- Monitor fluid motion
  - Defects in the final product
    - Surface velocity too fast: inclusions
    - Surface velocity too slow: surface defects, hooks
  - Breakouts
  - Quality monitoring: deviations in flow pattern should require extra inspection of associated steel product
- No reliable method to measure surface velocity exist

Mold Flow

Reasonably constant surface velocity to > ~ 30mm depth

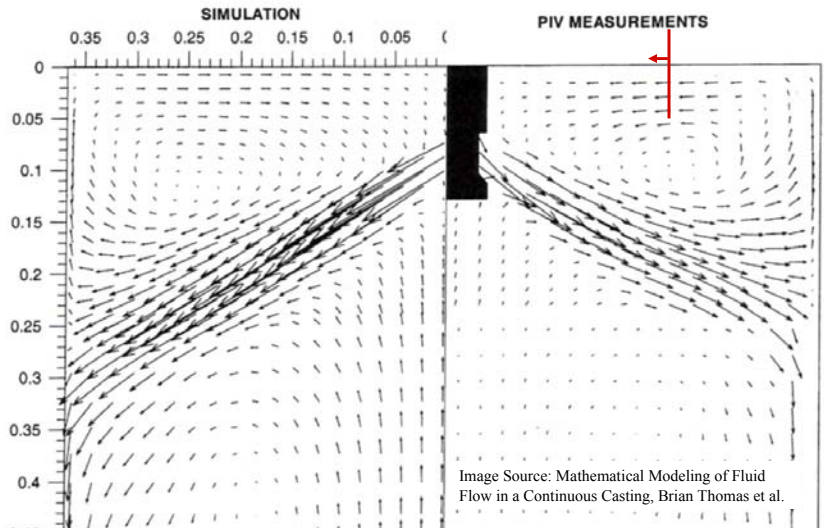

Image Source: Mathematical Modeling of Fluid Flow in a Continuous Casting, Brian Thomas et al.

Design Constraints

- Probe must withstand ~1550°C
- Must not dissolve or fracture (high thermal shock resistance)
- Account for EM noise and mold oscillations
- Must measure surface velocities between 0 and 0.5 m/s

Approach

- ✓ Literature review outlining viable methods
- ✓ Choice of methodology and design calculations
- ✓ Material selection and prototype construction
- ✓ Data acquisition
- ✓ water model calibration, testing, & validation
- ✓ Correlate to the steel environment

Eliminated Methods

- Hot wire anemometry
  - Temperature too high
- Heat exchanger
  - Manufacturing complexity
  - Freezing problem
- Paddle wheel
  - Inclusions
  - Freezing problem
- Tracers
  - Inclusions
- Melting spheres
  - Too expensive
- Electromagnetic sensor
  - Tested in steel industry with little success
  - Expensive
  - electromagnetic interference
- IR Doppler
  - Doesn't penetrate slag layer

Melting Sphere Method

Abandoned

- ❖ Difficult to calibrate
- ❖ Requires rebuilding for each use
- ❖ Expensive

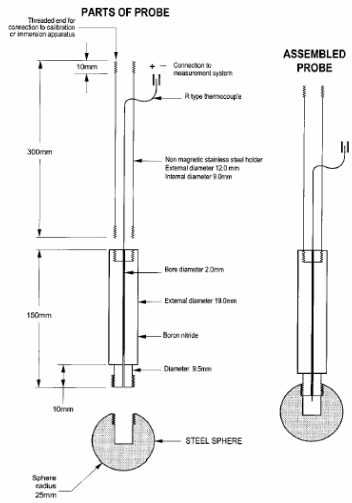

Images Source: A Novel Technique to Estimate Velocity in Liquid Steel and in Other High Temperature Liquid Metals Argyropoulos et al.

Karman Vortex Method

- Flow past a submerged cylinder in cross flow creates vortices which oscillate probe
- Oscillation frequency increases with velocity

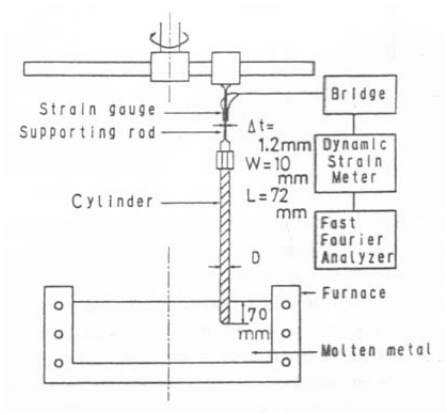

Evaluation of Karman Vortex Method

- Relationship between velocity and frequency:

$$V = \frac{f \cdot D}{St}$$

f = shedding frequency
D = diameter of cylinder
St = Strouhal number

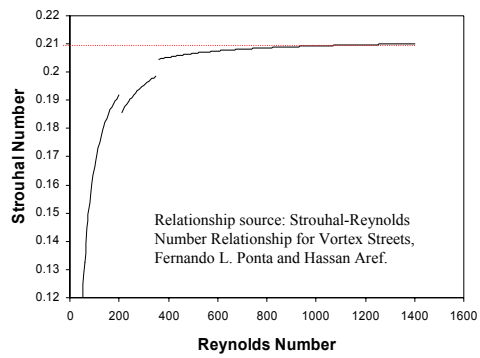

Poor correlation with water model measurements because: Vortex shedding vibrations are smaller than natural frequency of current rod system

Comparison With Water Model Measurements

Design Variables (Inputs)	
Oscillation time, t_o [s]	20
Strouhal Number, St	0.21
Diameter of probe, D [m]	0.009525

Pumping Velocity		Experimental Parameters			Theoretical Parameters	
Input	Output	Input	Outputs			
f_m [Hz]	V_m [m/s]	oscillations	f_{probe} [Hz]	V_k [m/s]	$f_{predict}$ [m/s]	Error [%]
35	0.218	54	2.7	0.122	4.81	43.8
45	0.307	59	2.95	0.134	6.77	56.4
55	0.396	66	3.3	0.150	8.73	62.2

- Very poor correlation. Why?
- Vortex shedding vibrations are smaller than natural frequency of current rod system

Drag Force on a Sphere

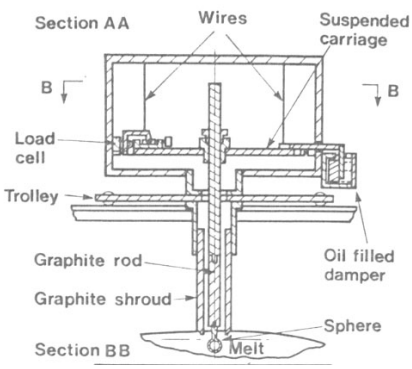

- Porous, spherical probe is submerged in cross-flow
- Velocity dependant drag force causes sphere to displace
- Displacement measured by pressure sensors

Drag Force on a Sphere

- Advantages
  - Capable of measuring 2-D velocity
  - Has been tested in low temperature liquid metal environment with good results
  - Determines local velocity
  - Not a function of depth
  - Easily tested in water model
  - Tolerant to electromagnetic noise
- Disadvantages
  - Not tested in molten steel
  - Complex shape makes for difficulty in manufacturing
  - Drag coefficients not well known for porous sphere

Drag Force on a Cylinder in Cross Flow

- Design:
  - Thin beam : magnifies deflection
  - Thick cylinder : transmits drag force

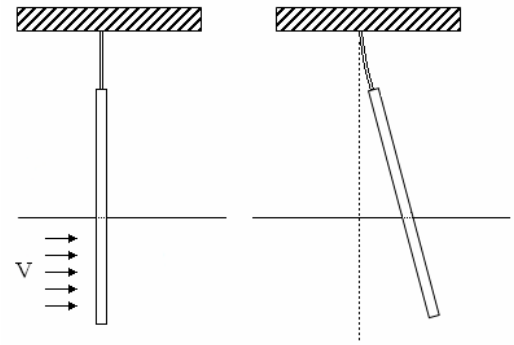

Same probe could measure Drag force and Karman vortex velocity simulataneously

Relationship Between Reynolds Number and Drag Coefficient

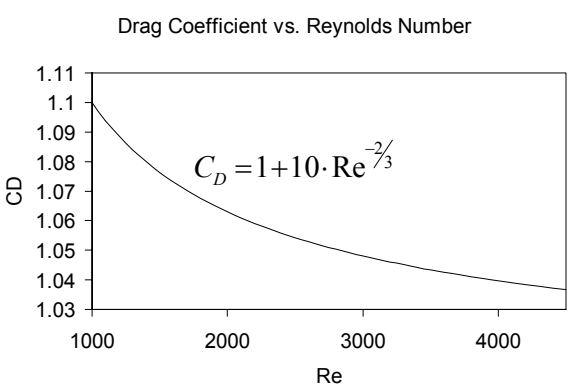

- Drag force on cylinder:

$$F_D = \frac{C_D \cdot A \cdot \rho \cdot V^2}{2}$$

$$Re = \frac{V \cdot D_{rod}}{\nu}$$

Drag Force Calculations

- Angular displacement of plate:

$$\theta = \frac{1}{E \cdot I}\left[F_D \cdot x \cdot L + F \cdot \left(\frac{L^2}{2}\right)\right]$$

- Deflection of plate:

$$d_{plate} = \frac{1}{E \cdot I}\left[F_D \cdot x \cdot \left(\frac{L^2}{2}\right) + F_D \cdot \left(\frac{L^3}{3}\right)\right]$$

- Deflection at end of probe:

$$d_{probe} = d_{plate} + L_{rod} \cdot \tan\theta$$

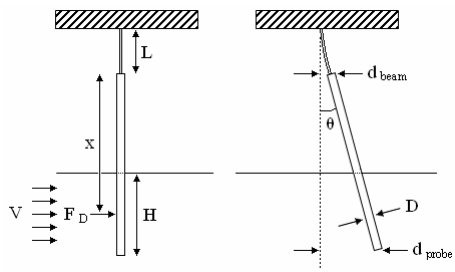

Effects of Submersion Depth on Drag Force Displacement

- The maximum deflection occurs at approximately 4 inches for all velocities
- Probe displacement can be considered independent of submersion depth

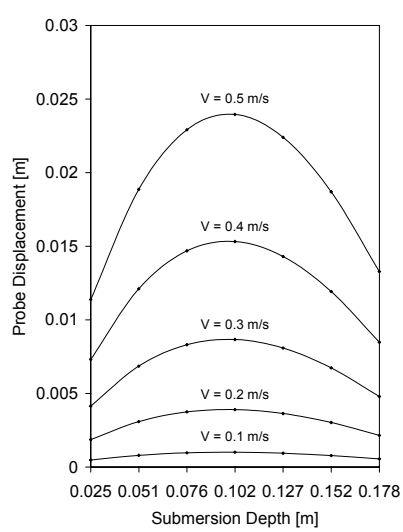

Initial Design

- Decoupled motion of Karman vortex and drag force
- Two different surface velocity measurements from same device
- Allowed for various thicknesses for bending beams
- Set aside Karman vortex component due to time constraints

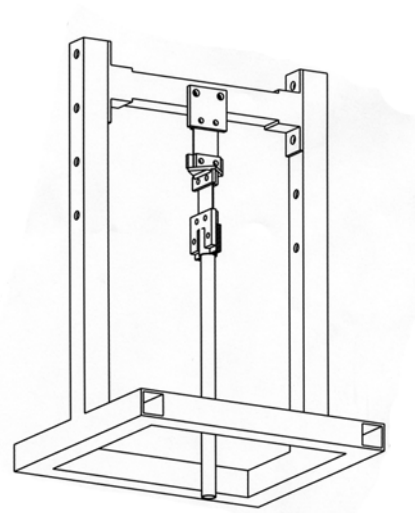

Probe and Testing Stand

- Strain Beam
- Probe
- Water Testing Stand

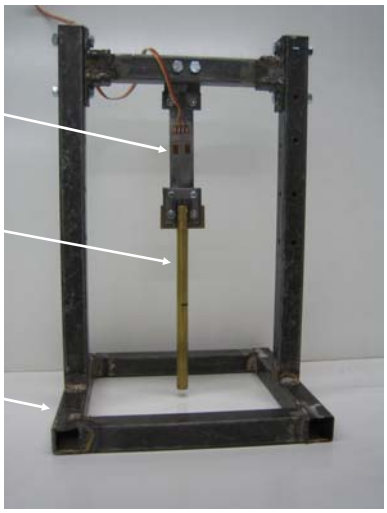

Data Acquisition Setup

- ±15V power supply
- Strain Bridge
- Data Acquisition Hardware

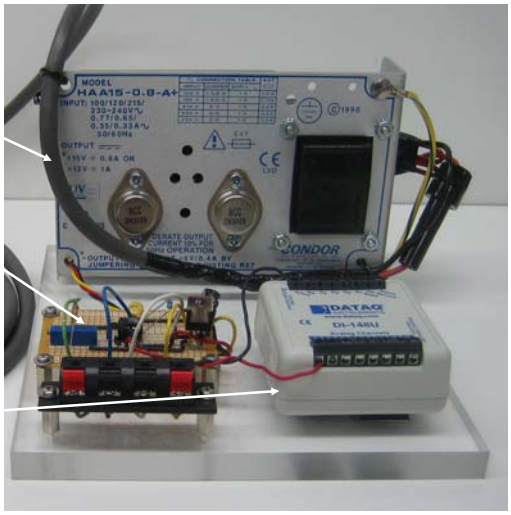

Strain Bridge Schematic

- The gain resistor can be chosen to give the optimal output voltage for data acquisition

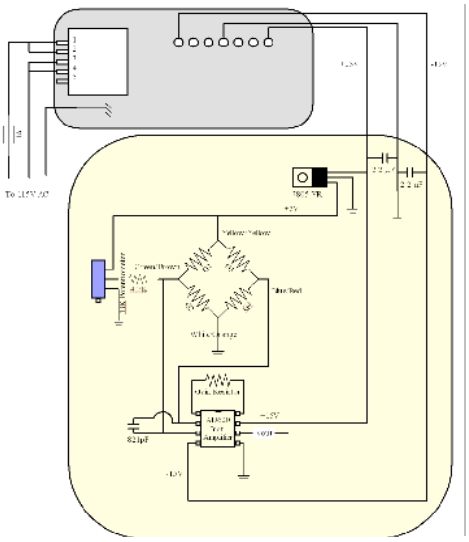

Strain Gauges Mounted on Beam

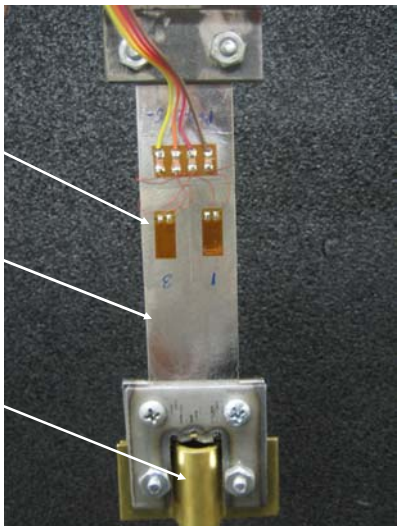

Strain vs. Voltage

- Voltages were measured for known displacements
- Displacements were correlated to strain
- Strain was correlated to voltage

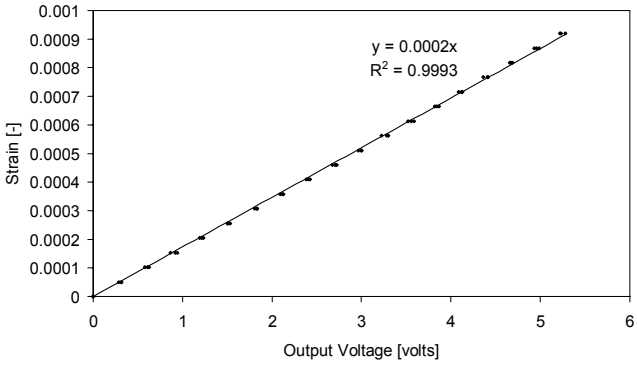

Surface Velocity increases with Output Voltage

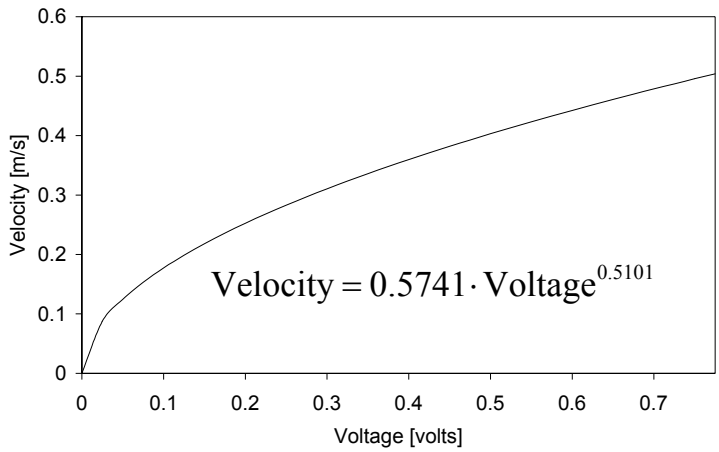

Water Tunnel

Testing in Water Tunnel

Water Tunnel Calibration

- Water Tunnel has no way of displaying velocity
- A tracer study was conducted to determine the velocity in the water Tunnel

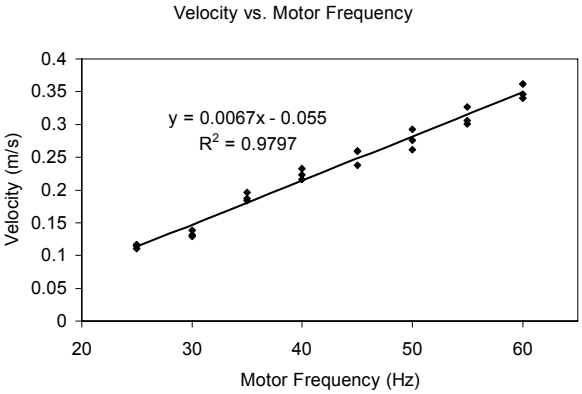

Validation of Probe in Water

- Comparison of measured & expected velocity:

Water Test Results			Expected Results		
Voltage [V]	Displacement [m]	Velocity [m/s]	*Motor Frequency [Hz]*	Velocity [m/s]	Error [%]
0.0543	0.00092	0.121	*25*	0.113	-7.50
0.0794	0.00135	0.147	*30*	0.146	-0.52
0.1095	0.00186	0.173	*35*	0.180	3.67
0.1438	0.00244	0.199	*40*	0.213	6.72
0.1880	0.00320	0.228	*45*	0.247	7.58
0.2384	0.00405	0.257	*50*	0.280	8.17
0.2939	0.00500	0.286	*55*	0.314	8.74
0.3505	0.00596	0.313	*60*	0.347	9.81

Validation of Probe in Water

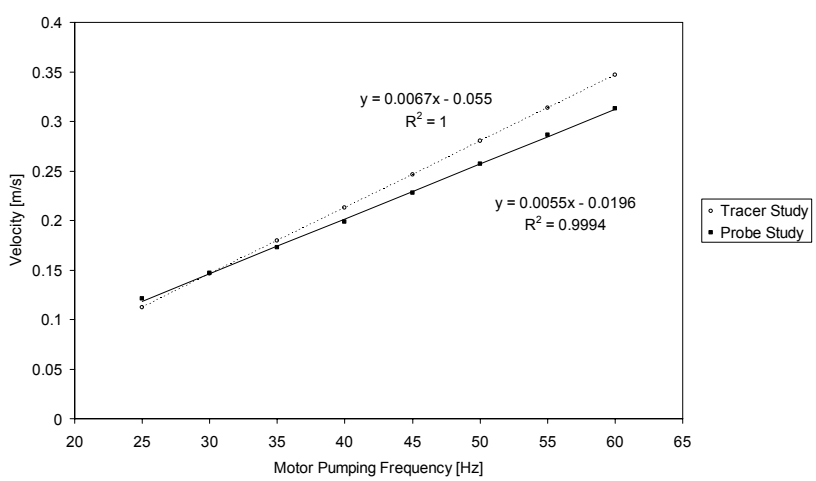

Probe Material Selection

Refractory Materials

- Boron Nitride
  - Possible contamination
- Beta Sialon
  - Very expensive
- Tantalum
  - Limited sources
  - Expensive
- Alumina Graphite
  - Ideal (SEN Material)
  - Expensive, difficult to acquire
- Alumina
  - Less expensive than alumina graphite
  - Readily available

Future Steel Testing

- Larger drag force in steel requires thicker strain beam:
  - Large deflections due to increased forces surpass the limits of the beam theory applied
  - Steel testing strain beam should be 1.2 mm thick
- Alumina probe must be preheated to withstand thermal shock

Conclusions

- A device to measure surface velocity of molten steel in the CC mold has been designed
- The device has been validated in a water model and measures surface velocity to within 10% from 0.1- 0.4m/sec
- Design features
  - Simple, robust, mechanical mechanism
  - Capable of operating in molten steel
  - Resistant to fluctuations in a range of submersion depths
  - Tolerant to electromagnetic noise
  - Inexpensive

Future Work

- Construct mounting apparatus to suspend device over continuous casting mold
- Test in molten steel environment (quantification of molten steel velocity)
- Validation / comparison with nail-board measurements and modeling predictions
- Further study of Karman vortex method