Continuous Casting Consortium

Modeling of Fluid Flow, Mixing and Inclusion Motion in Bottom Gas-Stirred Molten Steel Vessel

— Development of a Process to Continuously Melt, Refine, and Cast High-Quality Steel

Lifeng Zhang, Brian G. Thomas
University of Illinois

May 10, 2004

Acknowledgements

- Continuous Casting Consortium at UIUC
- UMR (Prof. Kent Peaslee, Prof. David Robertson, Mr. Jorg Peter)
- Department of Energy (DOE)
- Fluent Inc.
- National Center for Supercomputing Applications at UIUC

Conceptual layout for 110 tph process

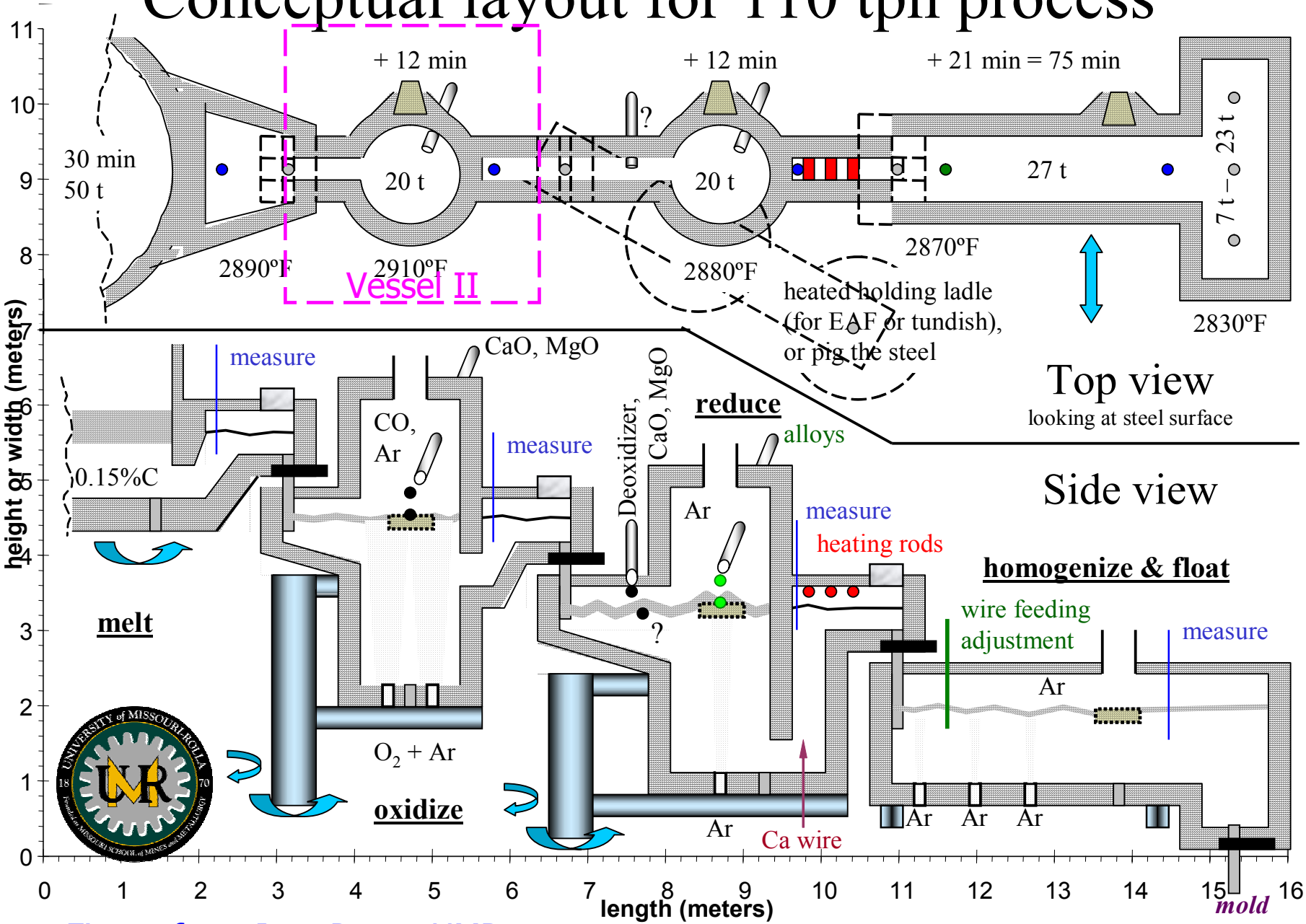

Figure from Jorg Peter, UMR

Geometry of Vessel II

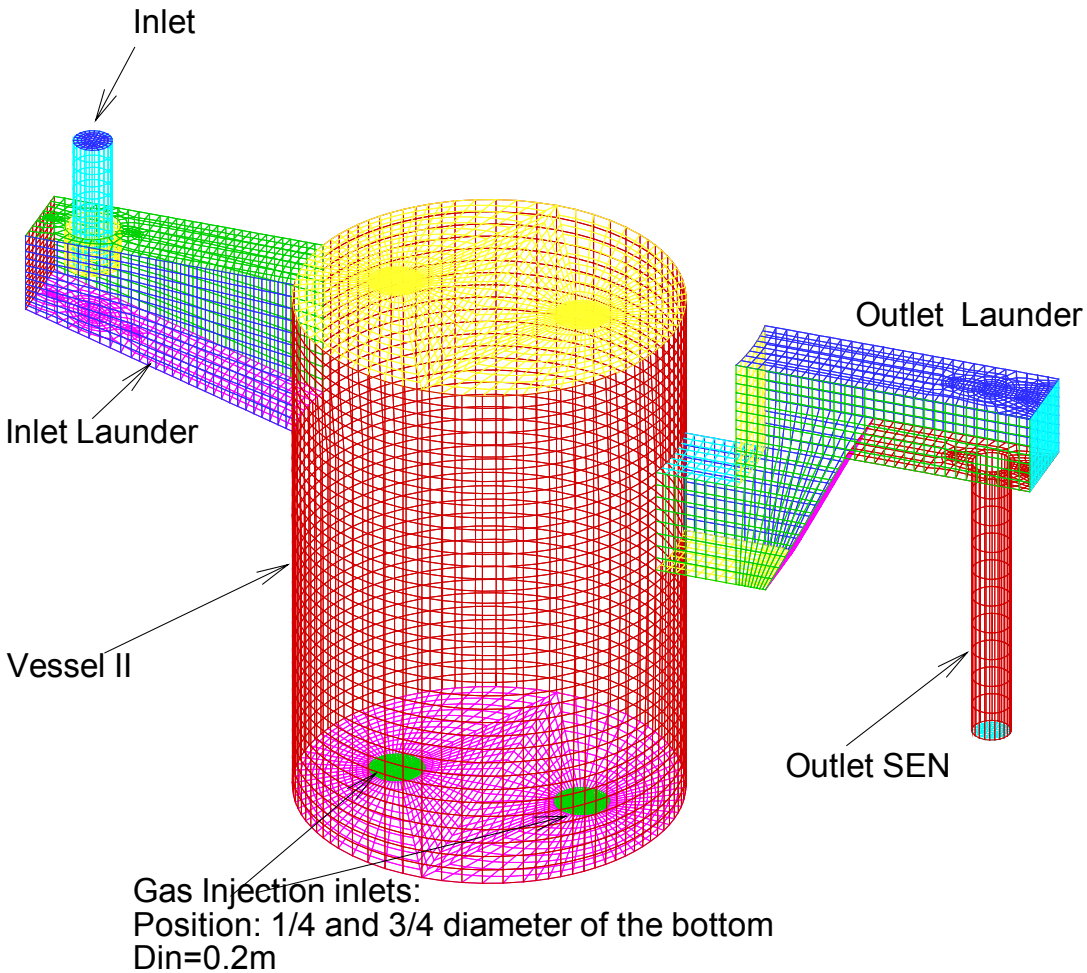

Geometry of Vessel II

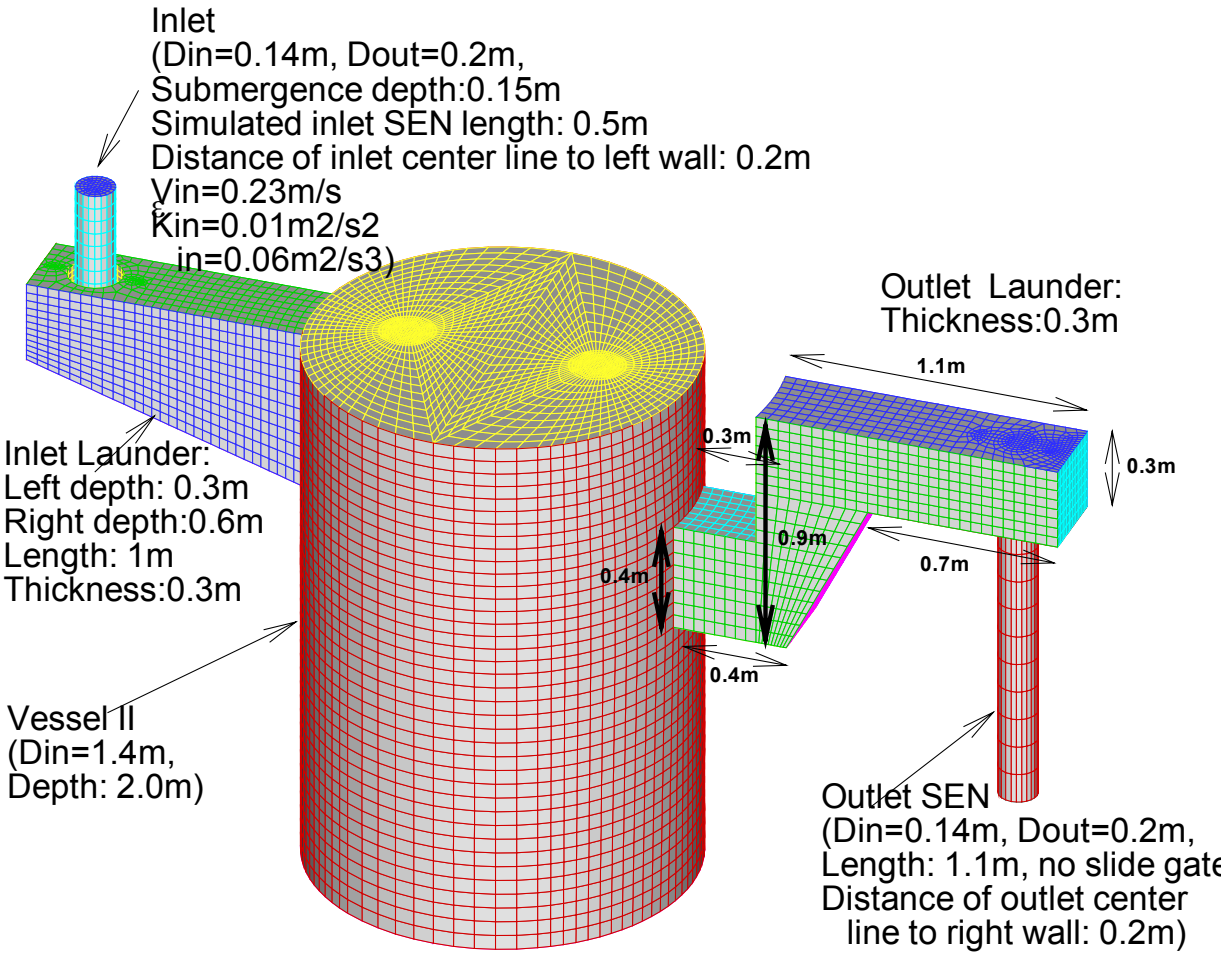

Geometry of Vessel II

Inner diameter:	D=1.4m
Steel bath height:	H_{steel}= 2.0m
Slag depth:	H_{slag}=0.2m
Diameter of gas porous plug:	0.2m (two plugs)
Inlet nozzle inner diameter:	$D_{steel,\ in}$=0.14m
Inlet nozzle outer diameter:	0.2m
Inlet submergence depth:	0.15m
Inlet SEN length:	1.1m
Modeled inlet length:	0.5m
Distance from inlet center line to right side wall:	0.2m
Molten Steel temperature:	T_o=1900K

Inlet and outlet launders on opposites of vessels and directed radially

Input Flow Conditions

Steel flow rate:	99.5 tons/hour
Steel density:	7020 kg/m^3
Mean inlet velocity:	0.232 m/s
Cold argon gas flow rate:	0.49 m^3/min
Hot argon gas flow rate:	1.314 m^3/min
Mean bubble injection velocity:	0.35 m/s
Mean bubble size:	48mm

Discrete multiphase transient flow input: 19 bubbles/0.1s at each of the two gas inlets at the bottom

Fluid Flow and Particle Motion with Argon Injection

Fluid Flow with Argon Injection

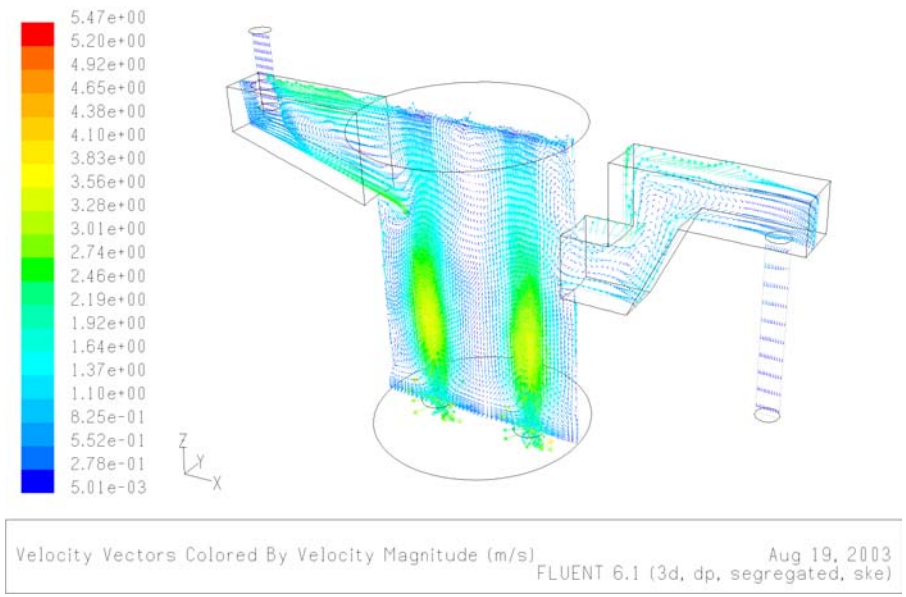

Fluid flow velocity

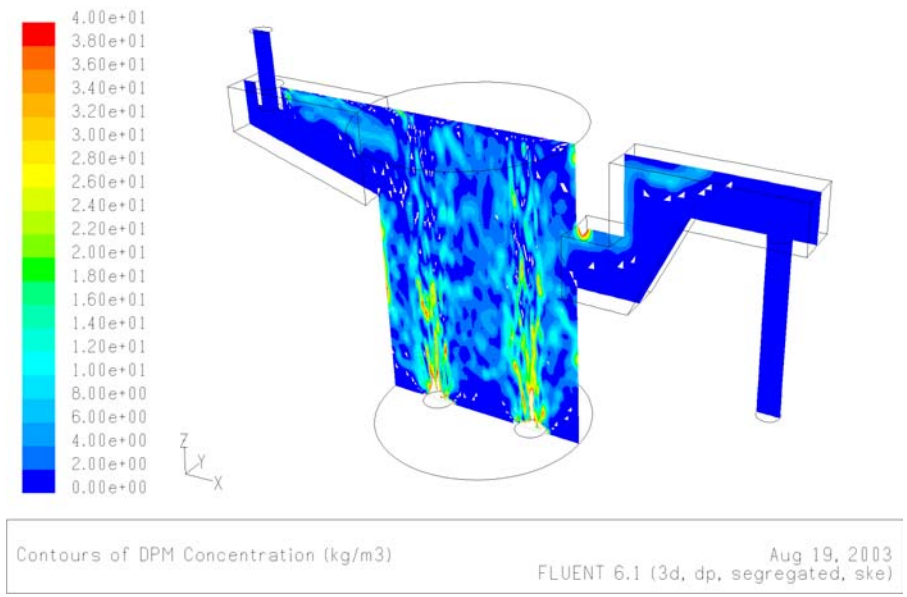

Gas concentration

Fluid Flow with Argon Injection

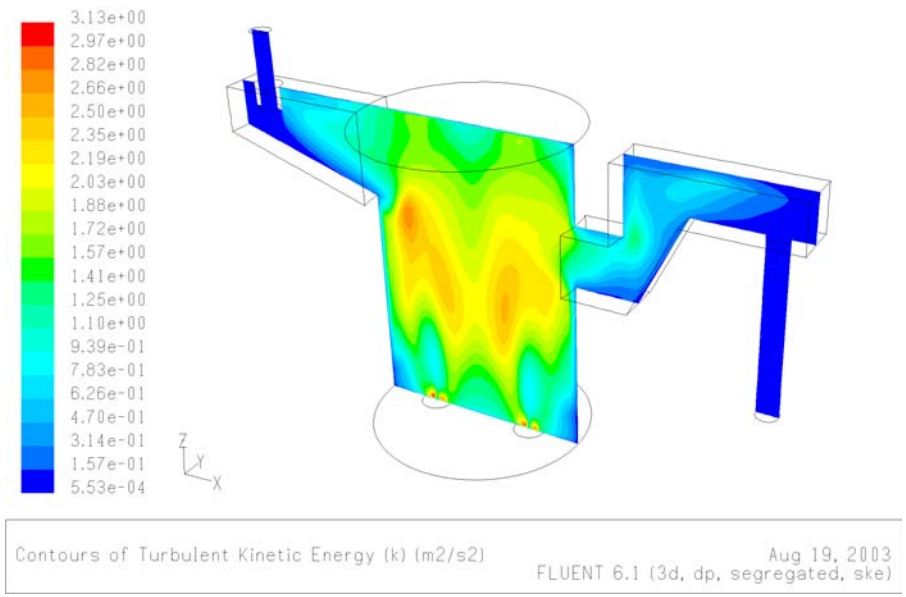

Turbulent Energy

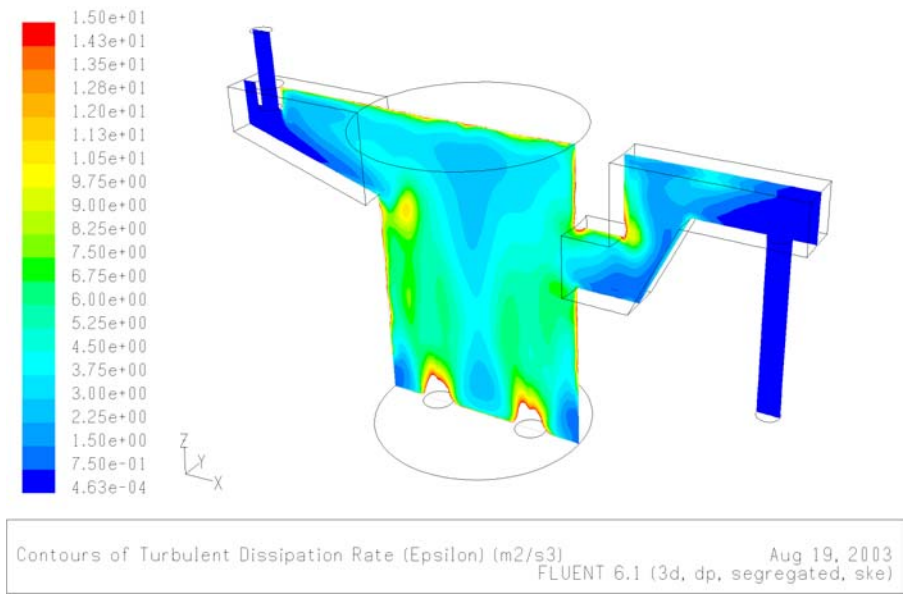

Turbulent Energy Dissipation Rate

Typical Trajectories of Alumina Inclusions (300μm, 3500 kg/m^3) (With Argon Injection)

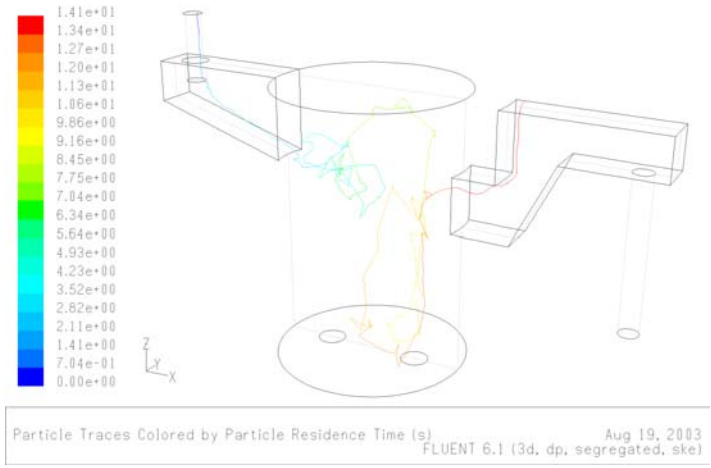

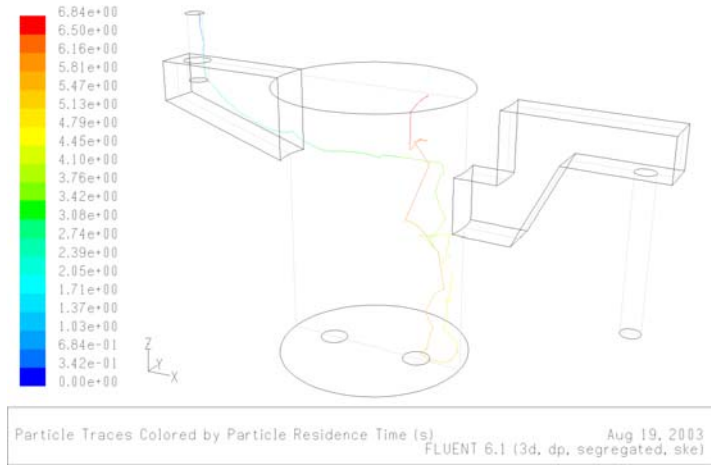

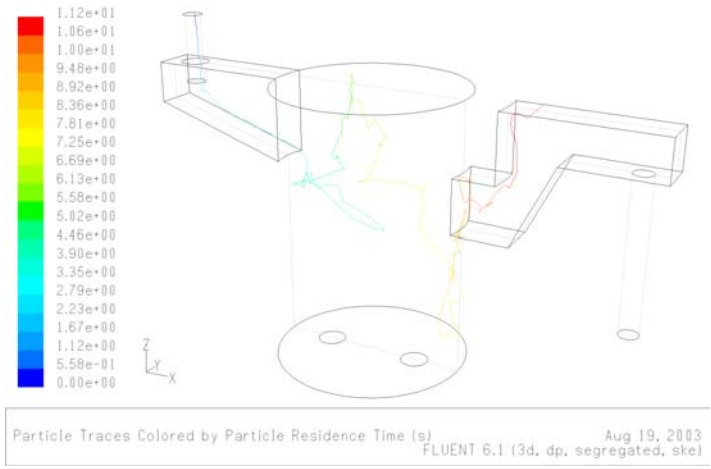

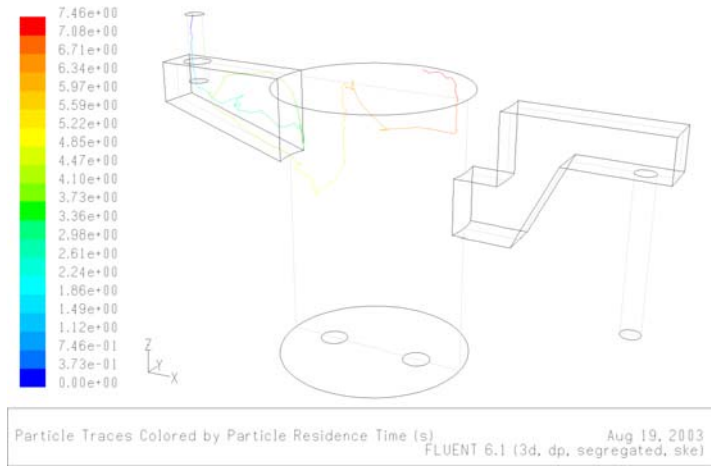

Transient Fluid Flow with Argon Injection

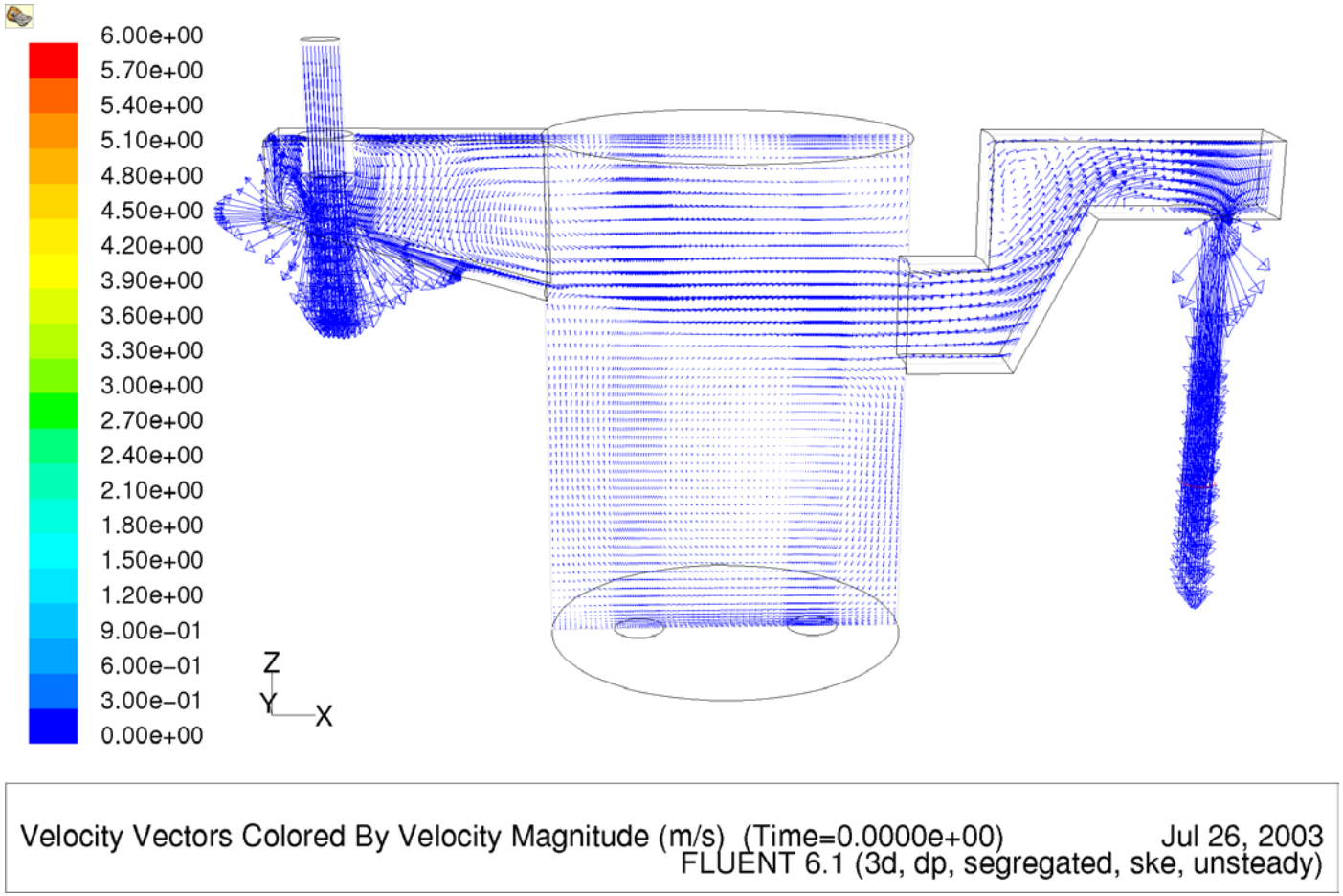

500 Bubbles injection per seconds

Fluid Flow and Particle Motion without Argon Injection

Fluid Flow Velocities

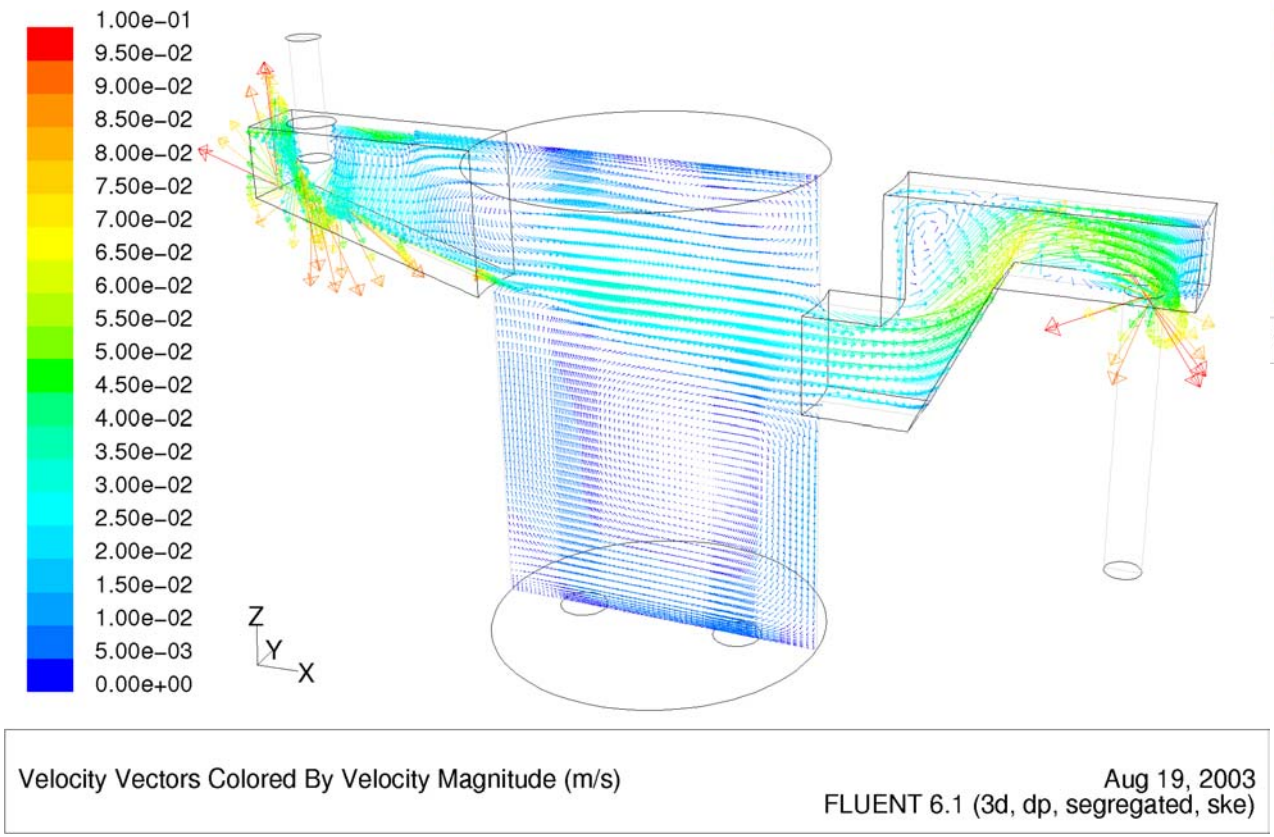

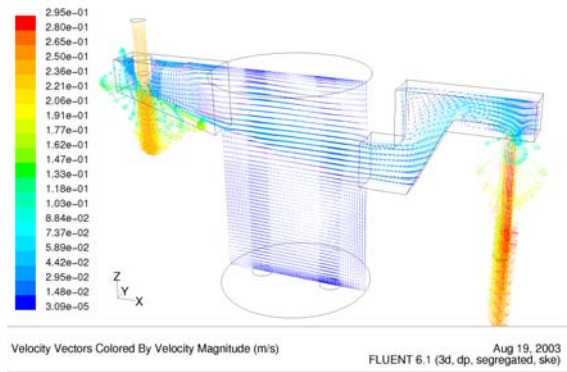

Typical Trajectories of Tracer Particle (Without Random Motion)

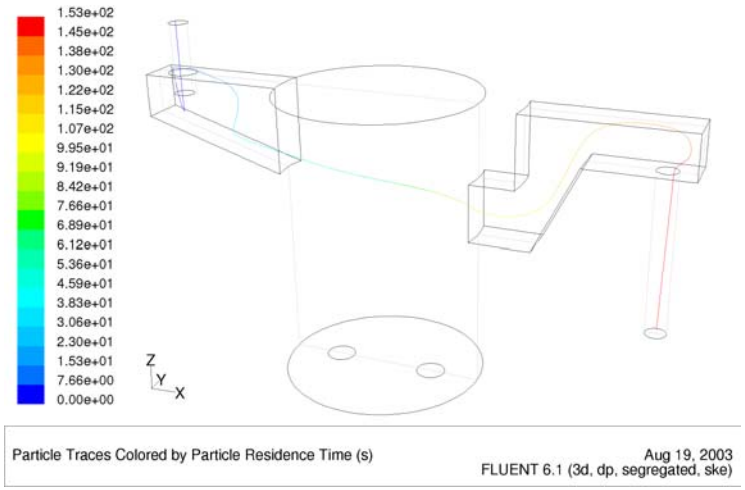

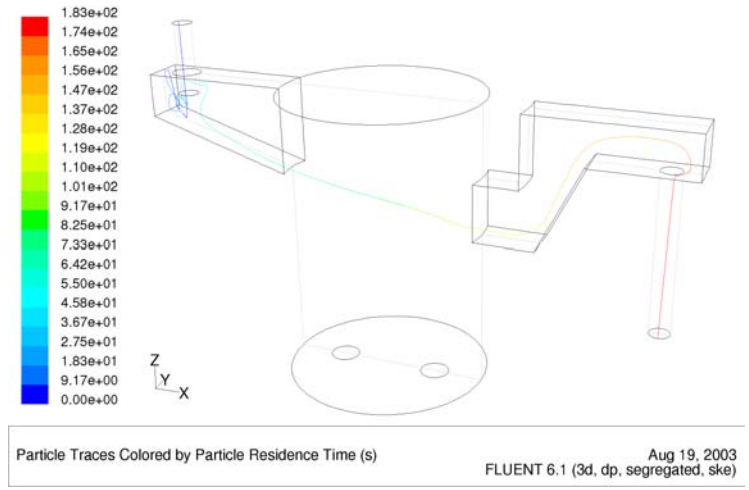

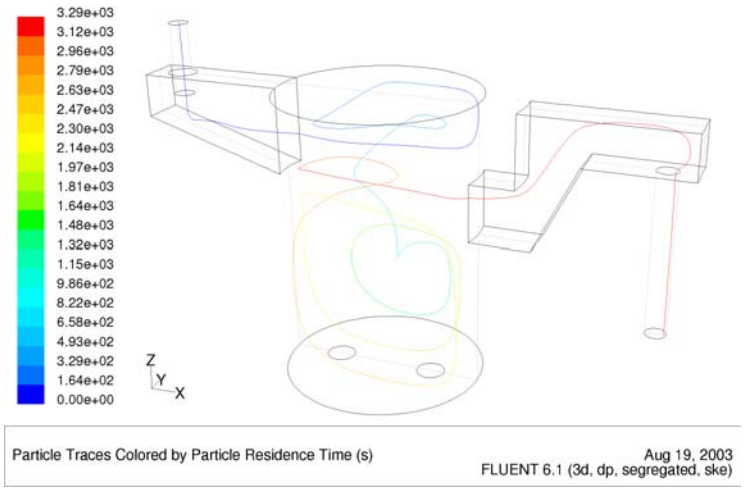

Typical Trajectories of Particles (With Random Motion)

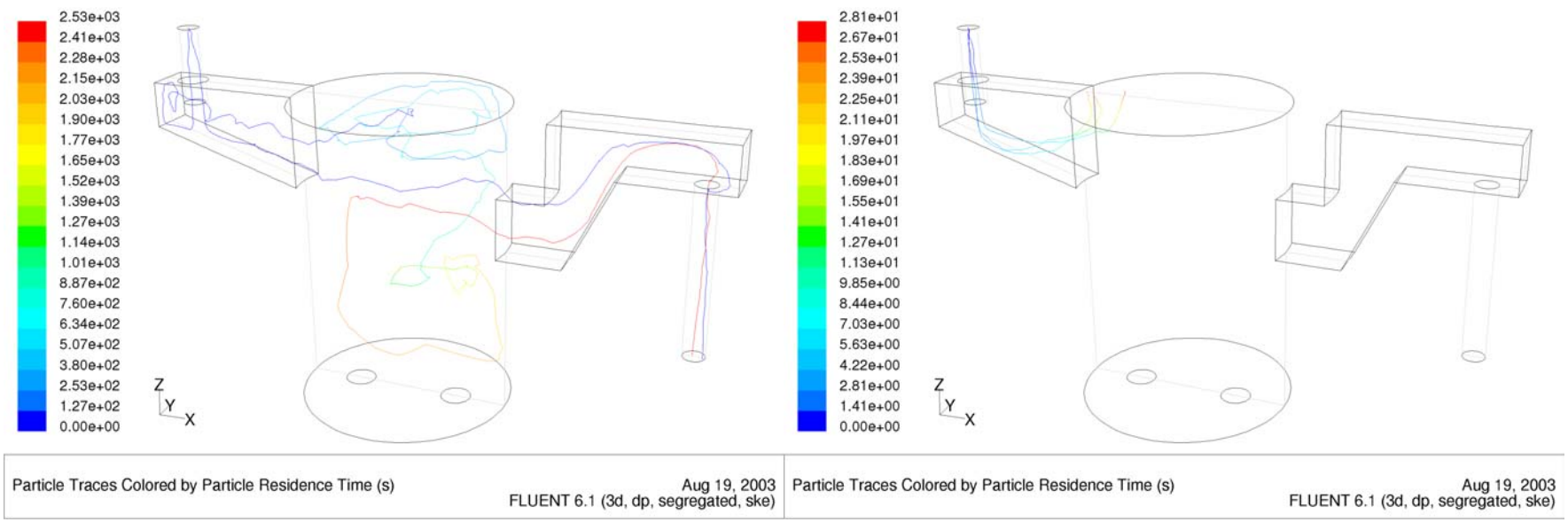

Tracer particles

Alumina Inclusions

Fluid Flow, Particle Motion, and Mixing in a Argon-Stirred Ladle

(300 ton, 4.5m height, 0.5 m^3/min argon injection, bubble size: 33mm)

Fluid Flow

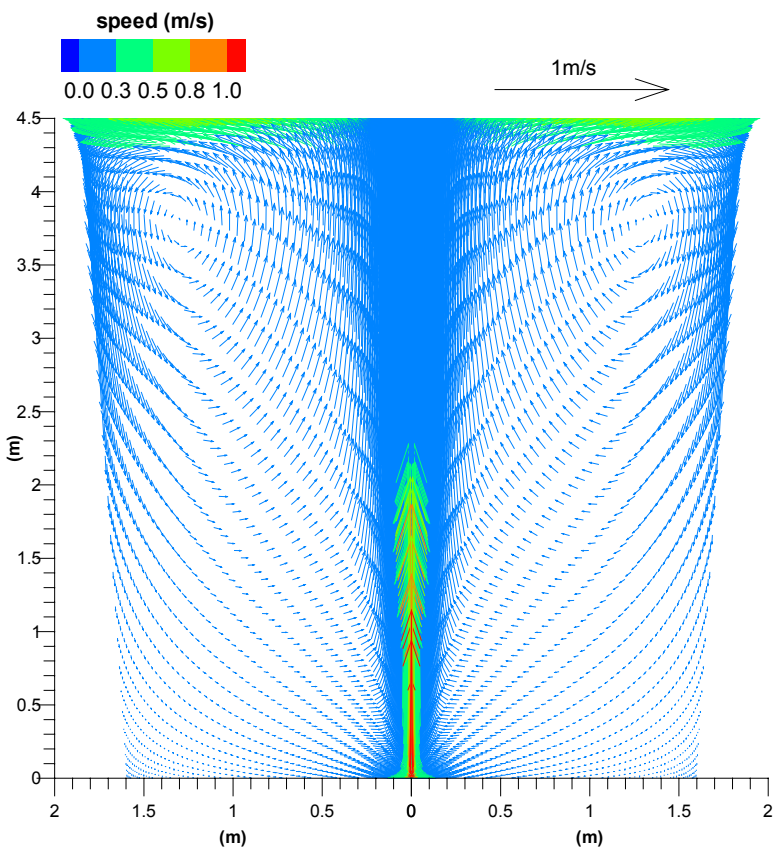
speed (m/s)
0.0 0.3 0.5 0.8 1.0
1m/s
(m)
(m)

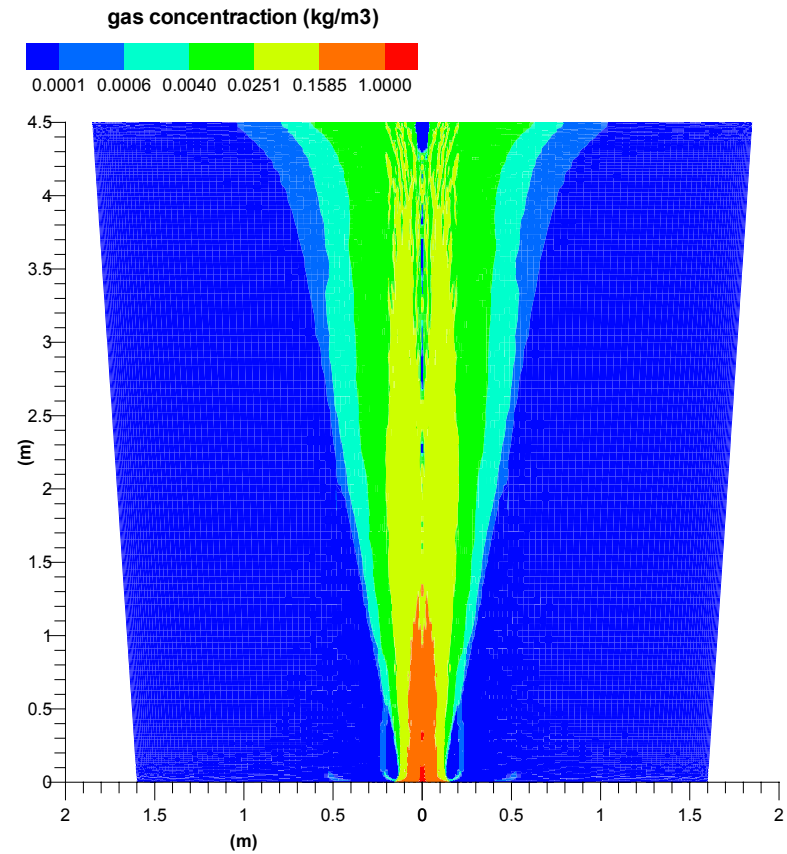
gas concentraction (kg/m3)
0.0001 0.0006 0.0040 0.0251 0.1585 1.0000
(m)
(m)

Particle Motion and Mixing Time

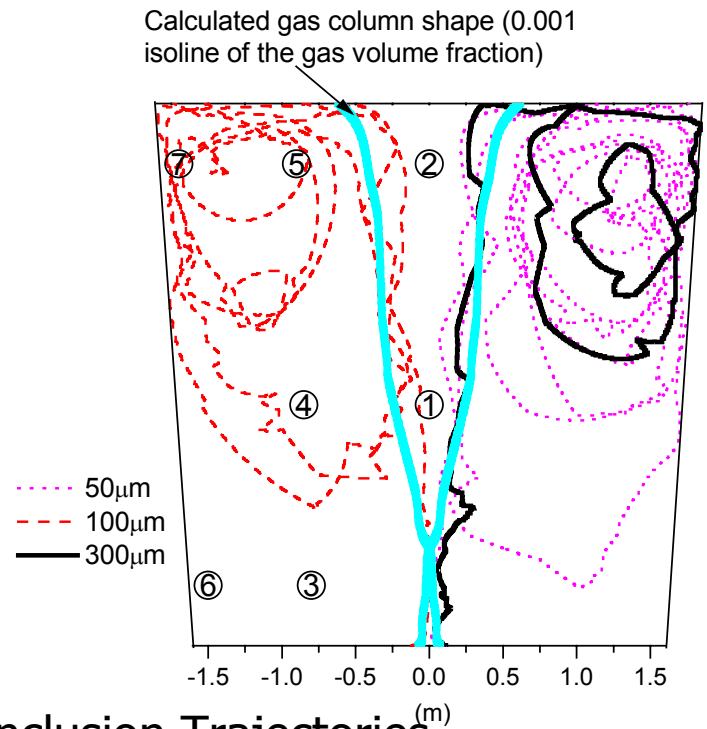

Inclusion Trajectories

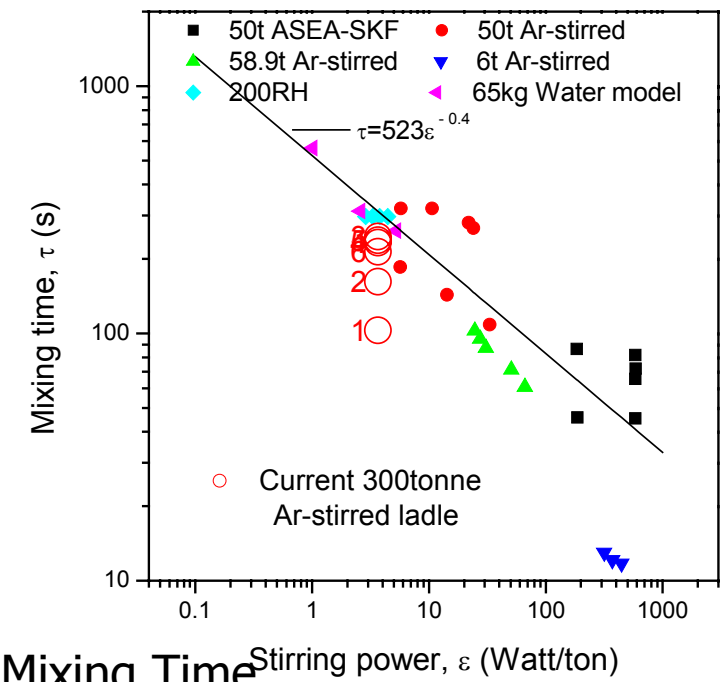

Mixing Time

Average Moving path length before reaching top surface:

- 100μm inclusion: 47.0m (285s);
- 33mm bubble: 5.0m (3.9s)

Dissolution of Aluminum Alloy in Ladle

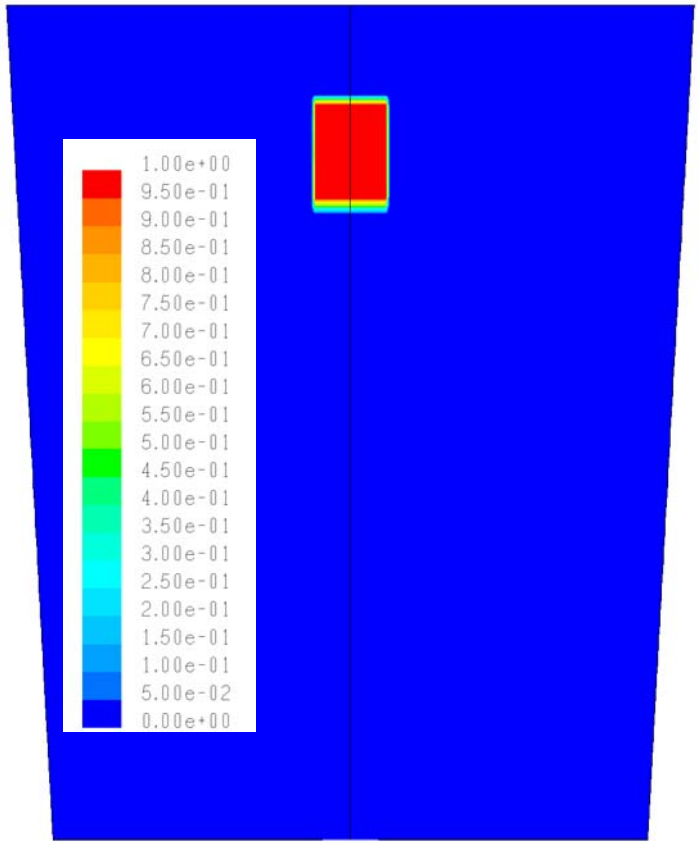

0s

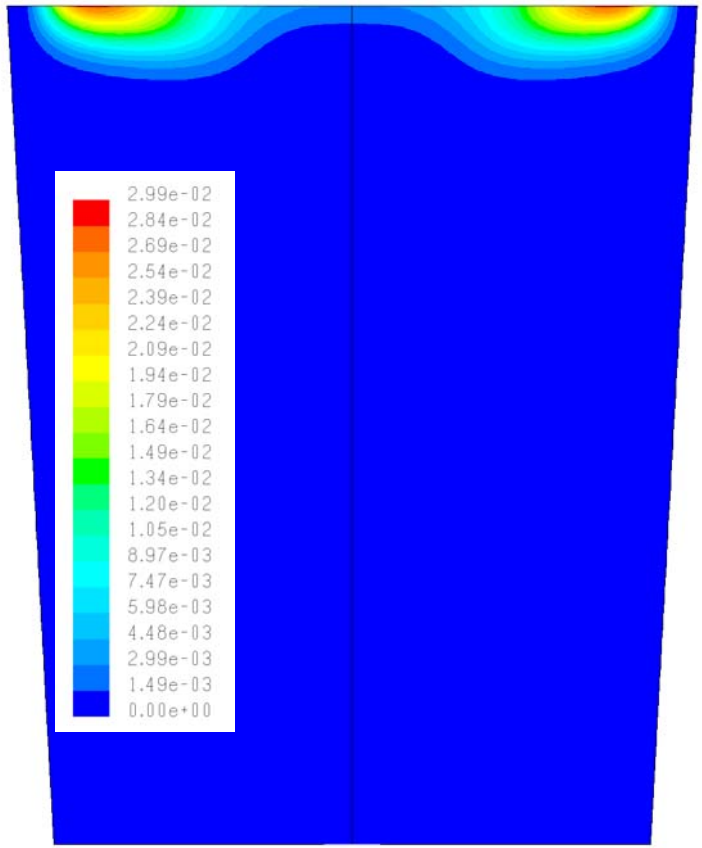

3s

Overall process summary

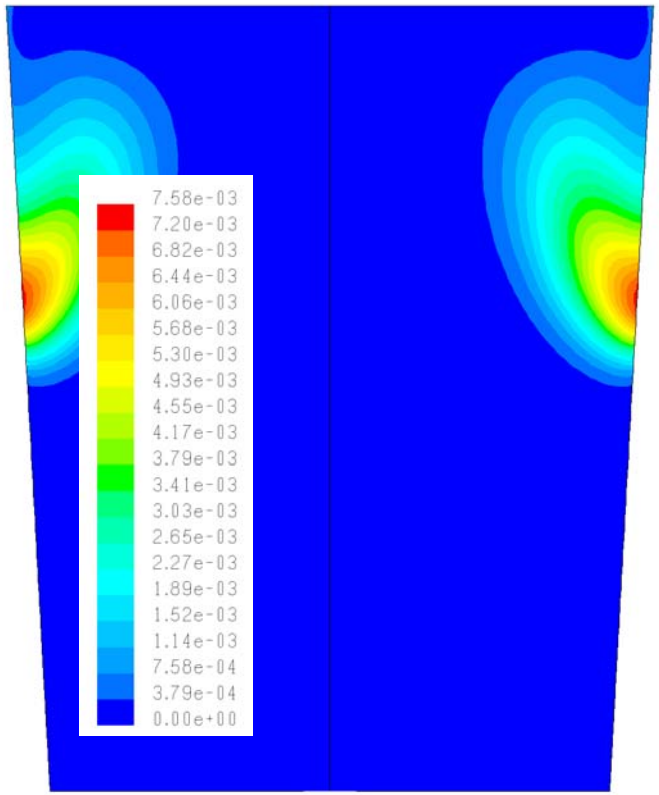

10s

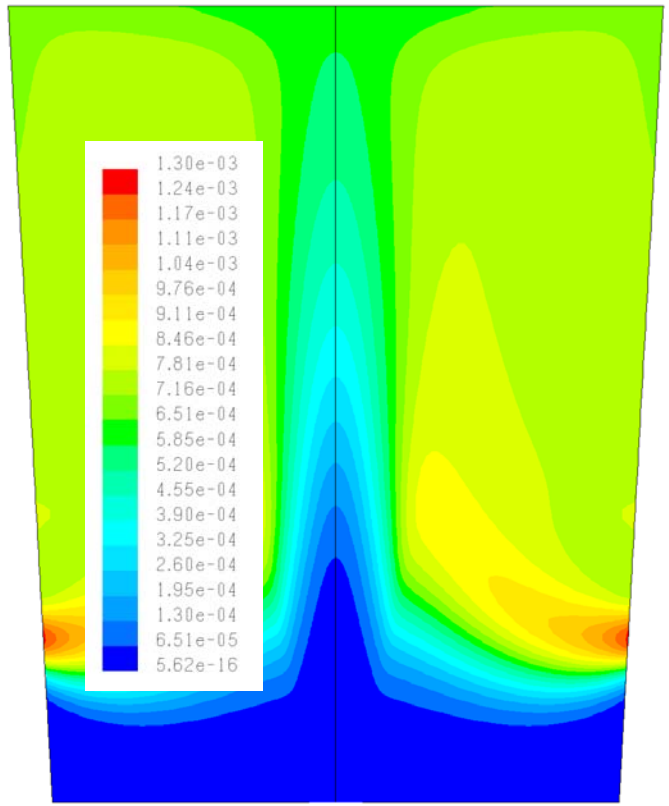

50s

Conclusions

1. The developed Lagrangian-Lagrangian multiphase model can predict the fluid flow, inclusion motion and mixing in vessels of this continuous steelmaking process
2. Without gas injection
   - Generating short circuiting flow pattern (from the inlet launder quickly and directly to the outlet launder), very detrimental for the process.
   - The inlet jet impinges strongly against the shallow bottom of the inlet launder, so possible splashing and erosion of the refractory bricks
   - Possible improvement: making the outlet launder not align directly across the vessel from the inlet.

Conclusions

3. With gas injection
   - Generating a strong recirculation in the whole height of the vessel.
   - Particles recirculate a long time,good for reactions.
4. Useful researches for this project (now and future):
   - Solute mixing (such as alloy dissolution) (*done by L. Zhang and J.Aoki for gas stirred ladles*)
   - Reactions such as deoxidation, impurity element and inclusion removal, depending on mixing phenomena at the interface of slag / metal and gas/metal.
   - Modeling inclusion nucleation, growth, collision (*done by Lifeng*) and interact with gas bubbles (*done by Lifeng and Jun Aoki in gas stirred ladles*)
   - Investigating the emulsification of the top slag